Power Supplies

www.shamrockcontrols.com

SHAMROCK CONTROLS

January 2011

Contents

10 Watt - Single Phase - 5/12/15/24 VDC.....2-3

20 Watt - Single Phase - 5/12/15/24 VDC.....4-5

40 Watt - Single Phase - 5/12/24/48 VDC.....6-7

60 Watt - Single Phase - 5/12/24/48 VDC.....8-9

75 Watt - Single Phase - 12/24/48 VDC.....10-11

96 Watt - Single Phase - 12/24/48 VDC.....12-13

120 Watt - Single Phase - 12/24/48 VDC.....14-15

240 Watt - Single Phase - 24/48 VDC.....16-17

240 Watt - Three Phase - 24/48 VDC.....18-19

480 Watt - Three Phase - 24/48 VDC.....20-21

960 Watt - Three Phase - 24/48 VDC.....22-24

10W Single Output Industrial DIN RAIL Power Supply MDR-10 series

■ Features :

- Universal AC input/Full range
- Protections: Short circuit / Overload / Over voltage
- Cooling by free air convection
- Can be installed on DIN rail TS-35/7.5 or 15
- NEC class 2 / LPS compliant
- Built in DC OK active signal
- LED indicator for power on
- No load power consumption<0.75W
- 100% full load burn-in test
- 3 years warranty

SPECIFICATION

MODEL		MDR-10-5	MDR-10-12	MDR-10-15	MDR-10-24
OUTPUT	DC VOLTAGE	5V	12V	15V	24V
	RATED CURRENT	2A	0.84A	0.67A	0.42A
	CURRENT RANGE	0 ~ 2A	0 ~ 0.84A	0 ~ 0.67A	0 ~ 0.42A
	RATED POWER	10W	10W	10W	10W
	RIPPLE & NOISE (max.) Note.2	80mVp-p	120mVp-p	120mVp-p	150mVp-p
	VOLTAGE TOLERANCE Note.3	±5.0%	±3.0%	±3.0%	±2.0%
	LINE REGULATION	±1.0%	±1.0%	±1.0%	±1.0%
	LOAD REGULATION	±5.0%	±3.0%	±3.0%	±2.0%
	SETUP, RISE TIME Note.5	500ms, 30ms/230VAC 1000ms, 30ms/115VAC at full load			
	HOLD UP TIME (Typ.)	120ms/230VAC 25ms/115VAC at full load			
INPUT	VOLTAGE RANGE	85 ~ 264VAC 120 ~ 370VDC			
	FREQUENCY RANGE	47 ~ 63Hz			
	EFFICIENCY (Typ.)	77%	81%	81%	84%
	AC CURRENT (Typ.)	0.33A/115VAC 0.21A/230VAC			
	INRUSH CURRENT (Typ.)	COLD START 35A/115VAC 70A/230VAC			
	LEAKAGE CURRENT	<1mA / 240VAC			
PROTECTION	OVERLOAD	Above 105% rated output power			
		Protection type : Hiccup mode, recovers automatically after fault condition is removed			
	OVER VOLTAGE	5.75 ~ 6.75V	13.8 ~ 16.2V	17.25 ~ 20.25V	27.6 ~ 32.4V
		Protection type : Shut down o/p voltage, re-power on to recover			
FUNCTION	DC OK ACTIVE SIGNAL (max.)	3.75 ~ 6V / 50mA	9 ~ 13.5V / 40mA	11.5 ~ 16.5V / 40mA	18 ~ 27V / 20mA
ENVIRONMENT	WORKING TEMP.	-20 ~ +70℃ (Refer to output load derating curve)			
	WORKING HUMIDITY	20 ~ 90% RH non-condensing			
	STORAGE TEMP., HUMIDITY	-40 ~ +85℃, 10 ~ 95% RH			
	TEMP. COEFFICIENT	±0.03%/℃ (0 ~ 50℃)			
	VIBRATION	Component:10 ~ 500Hz, 2G 10min./1cycle, 60min. each along X, Y, Z axes; Mounting: Compliance to IEC60068-2-6			
SAFETY & EMC (Note 4)	SAFETY STANDARDS	UL508, TUV EN60950-1 approved, NEC class 2 / LPS compliant			
	WITHSTAND VOLTAGE	I/P-O/P:3KVAC I/P-FG:1.5KVAC O/P-FG:0.5KVAC			
	ISOLATION RESISTANCE	I/P-O/P, I/P-FG, O/P-FG:100M Ohms/500VDC			
	EMI CONDUCTION & RADIATION	Compliance to EN55011,EN55022 (CISPR22), EN61204-3 Class B			
	HARMONIC CURRENT	Compliance to EN61000-3-2,-3			
	EMS IMMUNITY	Compliance to EN61000-4-2, 3, 4, 5, 6, 8, 11, ENV50204, EN55024,EN61000-6-1,EN61204-3, light industry level, criteria A			
OTHERS	MTBF	584K hrs min. MIL-HDBK-217F (25℃)			
	DIMENSION	22.5*90*100mm (W*H*D)			
	PACKING	0.17Kg; 72pcs/13.2Kg/0.91CUFT			
NOTE	1. All parameters NOT specially mentioned are measured at 230VAC input, rated load and 25℃ of ambient temperature. 2. Ripple & noise are measured at 20MHz of bandwidth by using a 12" twisted pair-wire terminated with a 0.1uf & 47uf parallel capacitor. 3. Tolerance : includes set up tolerance, line regulation and load regulation. 4. The power supply is considered a component which will be installed into a final equipment. The final equipment must be re-confirmed that it still meets EMC directives. 5. Length of set up time is measured at cold first start. Turning ON/OFF the power supply may lead to increase of the set up time.				

Mechanical Specification

Case No. 956 Unit:mm

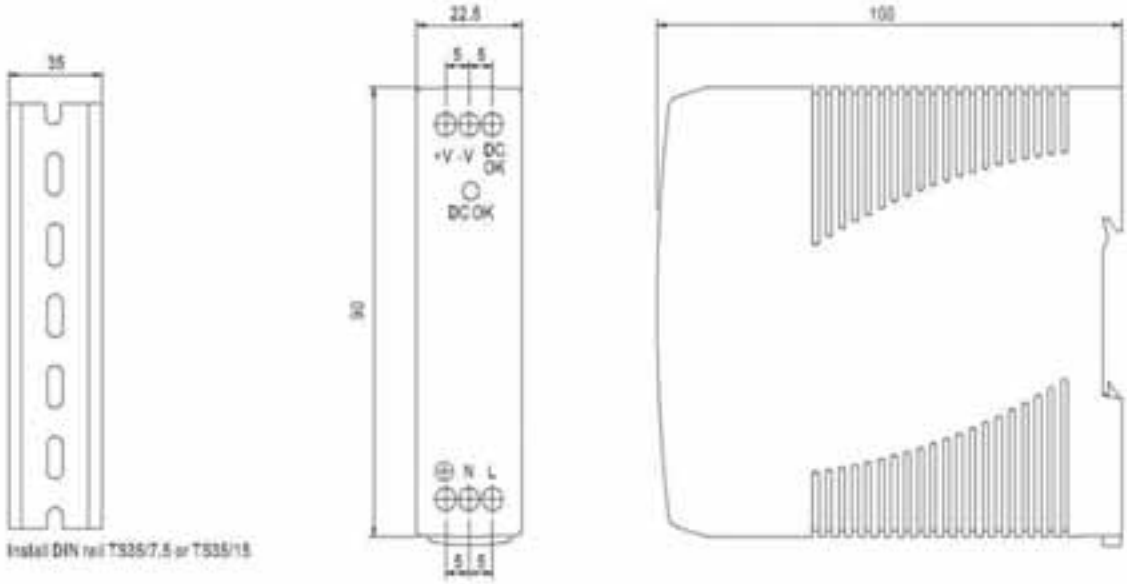

Block Diagram

fosc : 60KHz

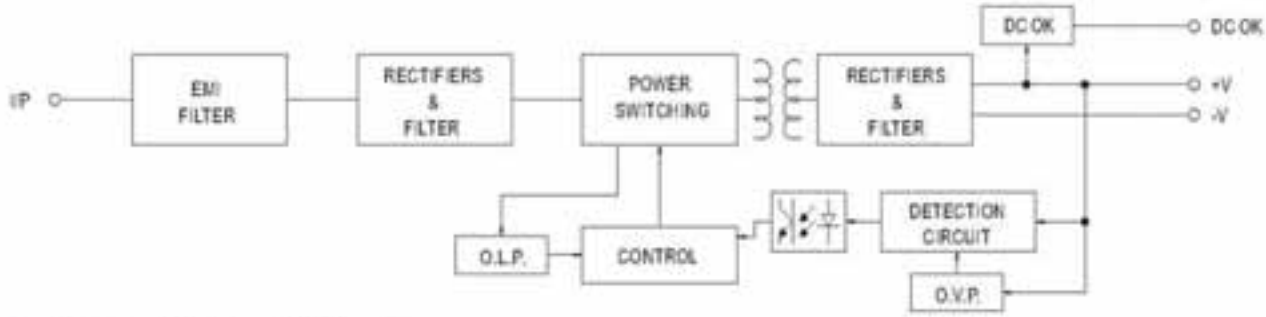

Application of DC OK Active Signal

(a) 5V signal

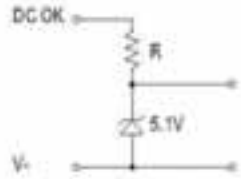

Model	R
5V	≥200Ω
12V	≥1.5KΩ
15V	≥2KΩ
24V	≥3.9KΩ

(b) LED

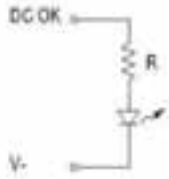

Model	R
5V	≥1KΩ
12V	≥2.4KΩ
15V	≥3KΩ
24V	≥4.7KΩ

(c) Relay

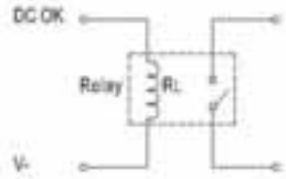

Model	RL
5V	≥120Ω
12V	≥700Ω
15V	≥700Ω
24V	≥1.2KΩ

Derating Curve

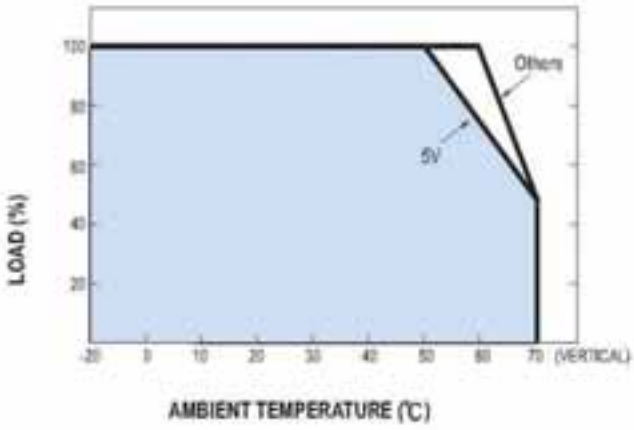

Output Derating VS Input Voltage

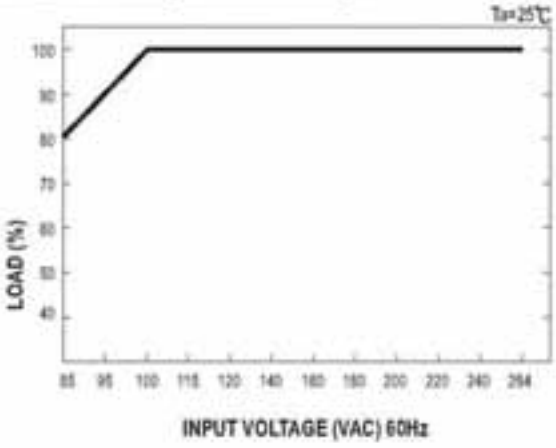

20W Single Output Industrial DIN RAIL Power Supply MDR-20 series

■ Features :

- Universal AC input/Full range
- Protections: Short circuit / Overload / Over voltage
- Cooling by free air convection
- Can be installed on DIN rail TS-35/7.5 or 15
- NEC class 2 / LPS compliant
- Built in DC OK active signal
- LED indicator for power on
- No load power consumption<0.75W
- 100% full load burn-in test
- 3 years warranty

SPECIFICATION

MODEL		MDR-20-5	MDR-20-12	MDR-20-15	MDR-20-24
OUTPUT	DC VOLTAGE	5V	12V	15V	24V
	RATED CURRENT	3A	1.67A	1.34A	1A
	CURRENT RANGE	0 ~ 3A	0 ~ 1.67A	0 ~ 1.34A	0 ~ 1A
	RATED POWER	15W	20W	20W	24W
	RIPPLE & NOISE (max.) Note.2	80mVp-p	120mVp-p	120mVp-p	150mVp-p
	VOLTAGE ADJ. RANGE	4.75 ~ 5.5V	10.8 ~ 13.2V	13.5 ~ 16.5V	21.6 ~ 26.4V
	VOLTAGE TOLERANCE Note.3	±2.0%	±1.0%	±1.0%	±1.0%
	LINE REGULATION	±1.0%	±1.0%	±1.0%	±1.0%
	LOAD REGULATION	±1.0%	±1.0%	±1.0%	±1.0%
	SETUP, RISE TIME Note.5	500ms, 30ms/230VAC 1000ms, 30ms/115VAC at full load			
	HOLD UP TIME (Typ.)	50ms/230VAC 20ms/115VAC at full load			
INPUT	VOLTAGE RANGE	85 ~ 264VAC 120 ~ 370VDC			
	FREQUENCY RANGE	47 ~ 63Hz			
	EFFICIENCY (Typ.)	76%	80%	81%	84%
	AC CURRENT (Typ.)	0.55A/115VAC 0.35A/230VAC			
	INRUSH CURRENT (Typ.)	COLD START 20A/115VAC 40A/230VAC			
	LEAKAGE CURRENT	<1mA / 240VAC			
PROTECTION	OVERLOAD	105 ~ 160% rated output power			
		Protection type : Constant current limiting, recovers automatically after fault condition is removed			
	OVER VOLTAGE	5.75 ~ 6.75V	13.8 ~ 16.2V	17.25 ~ 20.25V	27.6 ~ 32.4V
		Protection type : Shut down o/p voltage, re-power on to recover			
FUNCTION	DC OK ACTIVE SIGNAL (max.)	3.75 ~ 6V / 50mA	9 ~ 13.5V / 40mA	11.5 ~ 16.5V / 40mA	18 ~ 27V / 20mA
ENVIRONMENT	WORKING TEMP.	-20 ~ +70℃ (Refer to output load derating curve)			
	WORKING HUMIDITY	20 ~ 90% RH non-condensing			
	STORAGE TEMP., HUMIDITY	-40 ~ +85℃, 10 ~ 95% RH			
	TEMP. COEFFICIENT	±0.03%/℃ (0 ~ 50℃)			
	VIBRATION	Component:10 ~ 500Hz, 2G 10min./1cycle, 60min. each along X, Y, Z axes; Mounting: Compliance to IEC60068-2-6			
SAFETY & EMC (Note 4)	SAFETY STANDARDS	UL508, TUV EN60950-1 approved, NEC class 2 / LPS compliant			
	WITHSTAND VOLTAGE	I/P-O/P:3KVAC I/P-FG:1.5KVAC O/P-FG:0.5KVAC			
	ISOLATION RESISTANCE	I/P-O/P, I/P-FG, O/P-FG:100M Ohms/500VDC			
	EMI CONDUCTION & RADIATION	Compliance to EN55011,EN55022 (CISPR22), EN61204-3 Class B			
	HARMONIC CURRENT	Compliance to EN61000-3-2,-3			
	EMS IMMUNITY	Compliance to EN61000-4-2, 3, 4, 5, 6, 8, 11, ENV50204, EN55024,EN61000-6-1,EN61204-3, light industry level, criteria A			
OTHERS	MTBF	236.9K hrs min. MIL-HDBK-217F (25℃)			
	DIMENSION	22.5*90*100mm (W*H*D)			
	PACKING	0.19Kg; 72pcs/14.7Kg/0.91CUFT			
NOTE	1. All parameters NOT specially mentioned are measured at 230VAC input, rated load and 25℃ of ambient temperature. 2. Ripple & noise are measured at 20MHz of bandwidth by using a 12" twisted pair-wire terminated with a 0.1uf & 47uf parallel capacitor. 3. Tolerance : includes set up tolerance, line regulation and load regulation. 4. The power supply is considered a component which will be installed into a final equipment. The final equipment must be re-confirmed that it still meets EMC directives. 5. Length of set up time is measured at cold first start. Turning ON/OFF the power supply may lead to increase of the set up time.				

■ Mechanical Specification

Case No. 956 Unit:mm

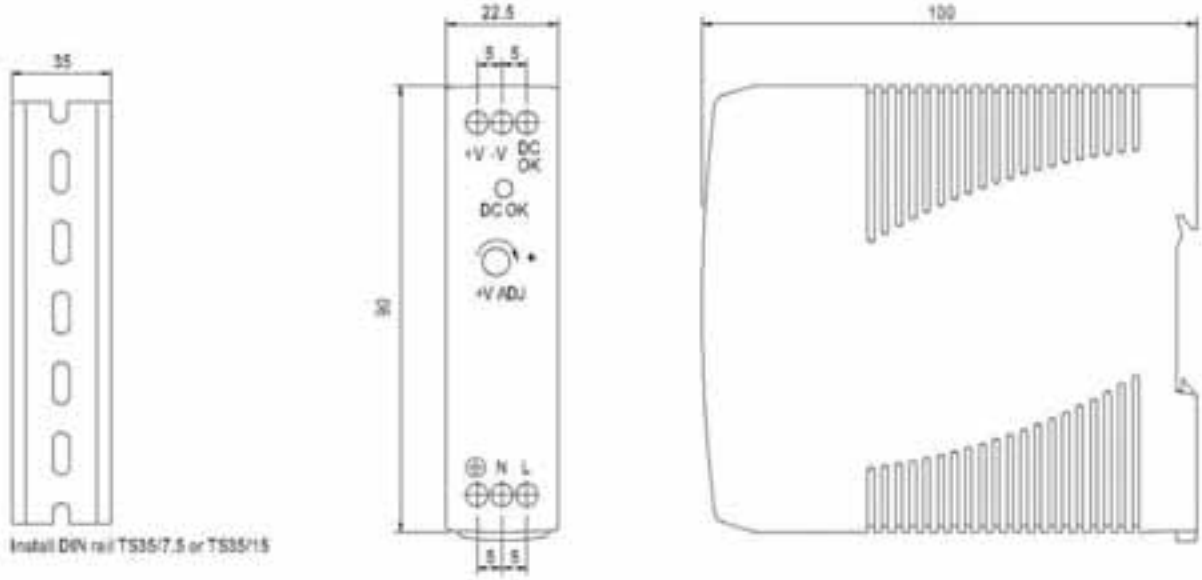

■ Block Diagram

fosc : 60KHz

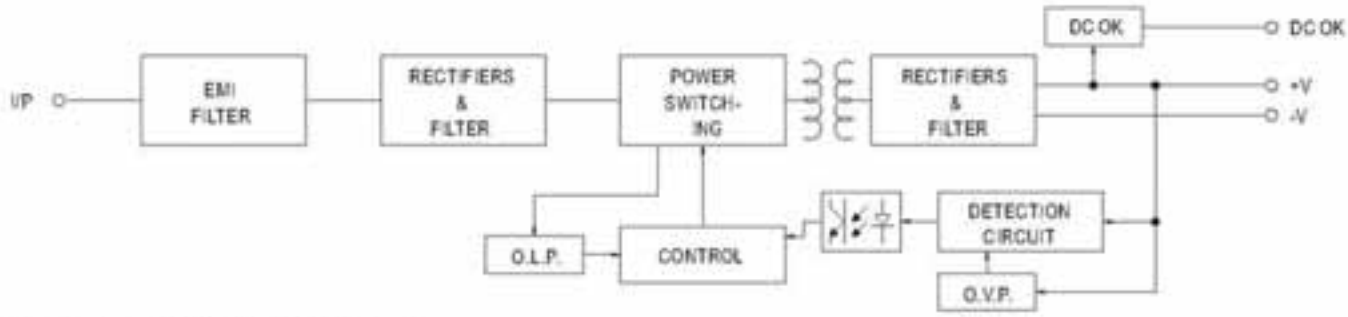

■ Application of DC OK Active Signal

(a) 5V signal

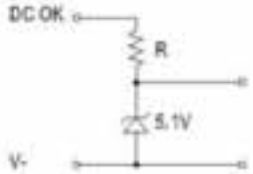

Model	R
5V	≥200Ω
12V	≥1.5KΩ
15V	≥2KΩ
24V	≥3.9KΩ

(b) LED

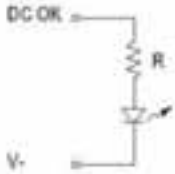

Model	R
5V	≥1KΩ
12V	≥2.4KΩ
15V	≥3KΩ
24V	≥4.7KΩ

(c) Relay

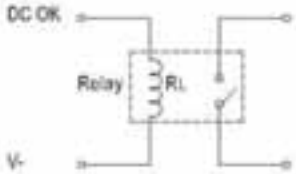

Model	RL
5V	≥120Ω
12V	≥700Ω
15V	≥700Ω
24V	≥1.2KΩ

■ Derating Curve

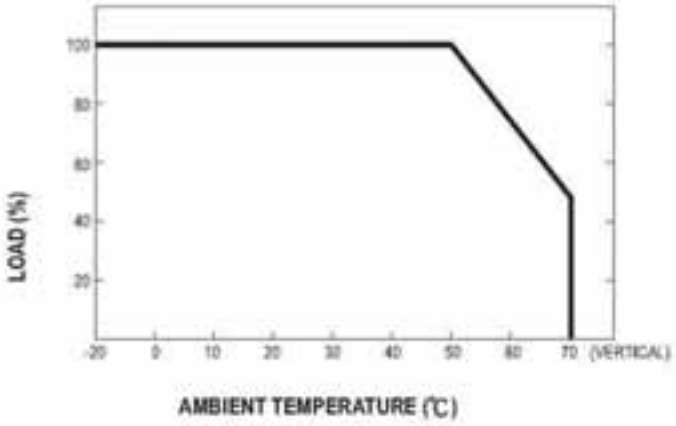

■ Output Derating VS Input Voltage

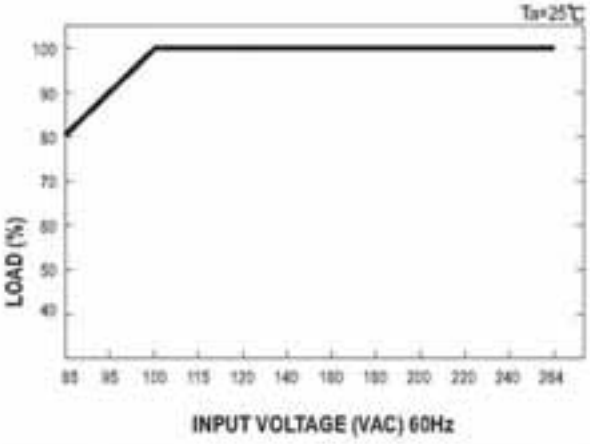

40W Single Output Industrial DIN RAIL Power Supply MDR-40 series

■ Features :

- Universal AC input/Full range
- Protections: Short circuit / Overload / Over voltage
- Cooling by free air convection
- Can be installed on DIN rail TS-35/7.5 or 15
- NEC class 2 / LPS compliant (12V,24V,48V only)
- LED indicator for power on
- DC OK relay contact
- No load power consumption<0.75W
- 100% full load burn-in test
- 3 years warranty

SPECIFICATION

MODEL		MDR-40-5	MDR-40-12	MDR-40-24	MDR-40-48
OUTPUT	DC VOLTAGE	5V	12V	24V	48V
	RATED CURRENT	6A	3.33A	1.7A	0.83A
	CURRENT RANGE	0 ~ 6A	0 ~ 3.33A	0 ~ 1.7A	0 ~ 0.83A
	RATED POWER	30W	40W	40.8W	39.8W
	RIPPLE & NOISE (max.) Note.2	80mVp-p	120mVp-p	150mVp-p	200mVp-p
	VOLTAGE ADJ. RANGE	5 ~ 6V	12 ~ 15V	24 ~ 30V	48 ~ 56V
	VOLTAGE TOLERANCE Note.3	±2.0%	±1.0%	±1.0%	±1.0%
	LINE REGULATION	±1.0%	±1.0%	±1.0%	±1.0%
	LOAD REGULATION	±1.0%	±1.0%	±1.0%	±1.0%
	SETUP, RISE TIME Note.5	500ms, 30ms/230VAC 500ms, 30ms/115VAC at full load			
	HOLD UP TIME (Typ.)	50ms/230VAC 20ms/115VAC at full load			
INPUT	VOLTAGE RANGE	85 ~ 264VAC 120 ~ 370VDC			
	FREQUENCY RANGE	47 ~ 63Hz			
	EFFICIENCY (Typ.)	78%	86%	88%	88%
	AC CURRENT (Typ.)	1.1A/115VAC 0.7A/230VAC			
	INRUSH CURRENT (Typ.)	COLD START 30A/115VAC 60A/230VAC			
	LEAKAGE CURRENT	<1mA / 240VAC			
PROTECTION	OVERLOAD	105 ~ 150% rated output power			
		Protection type : Constant current limiting, recovers automatically after fault condition is removed			
	OVER VOLTAGE	6.25 ~ 7.25V	15.6 ~ 18V	31.2 ~ 36V	57.6 ~ 64.8V
		Protection type : Shut down o/p voltage, re-power on to recover			
FUNCTION	DC OK SIGNAL	Relay contact rating(max.): 30V/1A resistive			
ENVIRONMENT	WORKING TEMP.	-20 ~ +70℃ (Refer to output load derating curve)			
	WORKING HUMIDITY	20 ~ 90% RH non-condensing			
	STORAGE TEMP., HUMIDITY	-40 ~ +85℃, 10 ~ 95% RH			
	TEMP. COEFFICIENT	±0.03%/℃ (0 ~ 50℃)			
	VIBRATION	Component : 10 ~ 500Hz, 2G 10min./1cycle, period for 60min. each along X, Y, Z axes ; Mounting : Compliance to IEC60068-2-6			
SAFETY & EMC (Note 4)	SAFETY STANDARDS	UL508, UL60950-1, TUV EN60950-1 approved, NEC class 2 / LPS compliant (12V,24V,48V only)			
	WITHSTAND VOLTAGE	I/P-O/P:3KVAC I/P-FG:1.5KVAC O/P-FG:0.5KVAC			
	ISOLATION RESISTANCE	I/P-O/P, I/P-FG, O/P-FG:>100M Ohms/500VDC 25℃ 70%RH			
	EMI CONDUCTION & RADIATION	Compliance to EN55011, EN55022 (CISPR22), EN61204-3 Class B			
	HARMONIC CURRENT	Compliance to EN61000-3-2,-3			
	EMS IMMUNITY	Compliance to EN61000-4-2, 3, 4, 5, 6, 8, 11, ENV50204, EN55024, EN61000-6-2, EN61204-3, heavy industry level, criteria A			
OTHERS	MTBF	301.7K hrs min. MIL-HDBK-217F (25℃)			
	DIMENSION	40*90*100mm (W*H*D)			
	PACKING	0.3Kg; 42pcs/13.6Kg/0.82CUFT			
NOTE	1. All parameters NOT specially mentioned are measured at 230VAC input, rated load and 25℃ of ambient temperature. 2. Ripple & noise are measured at 20MHz of bandwidth by using a 12" twisted pair-wire terminated with a 0.1uf & 47uf parallel capacitor. 3. Tolerance : includes set up tolerance, line regulation and load regulation. 4. The power supply is considered a component which will be installed into a final equipment. The final equipment must be re-confirmed that it still meets EMC directives. 5. Length of set up time is measured at first cold start. Turning ON/OFF the power supply may lead to increase of the set up time.				

■ Mechanical Specification

Case No.962A Unit:mm

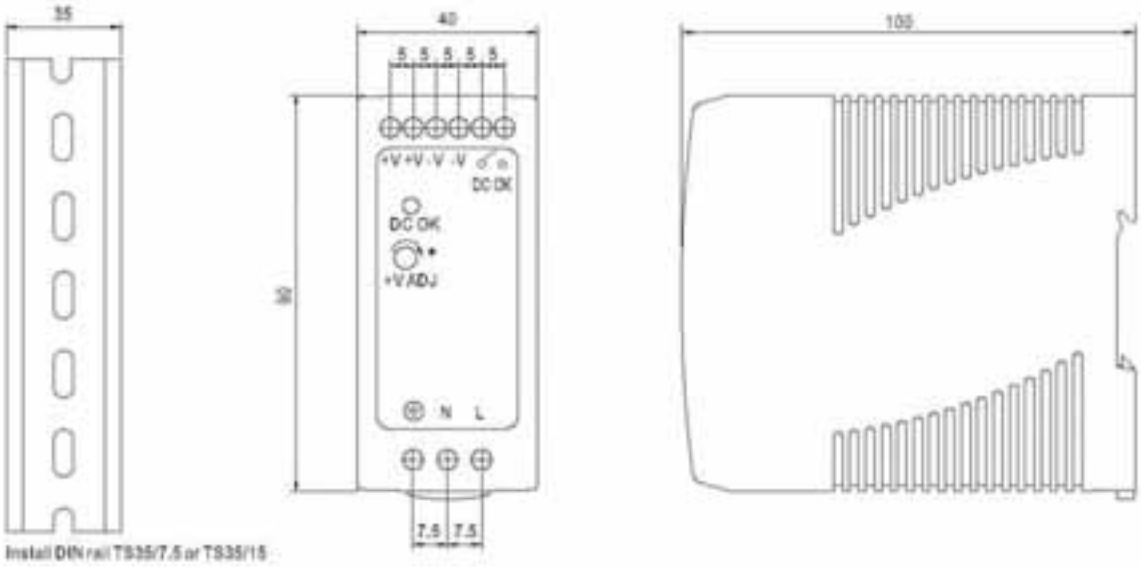

■ Block Diagram

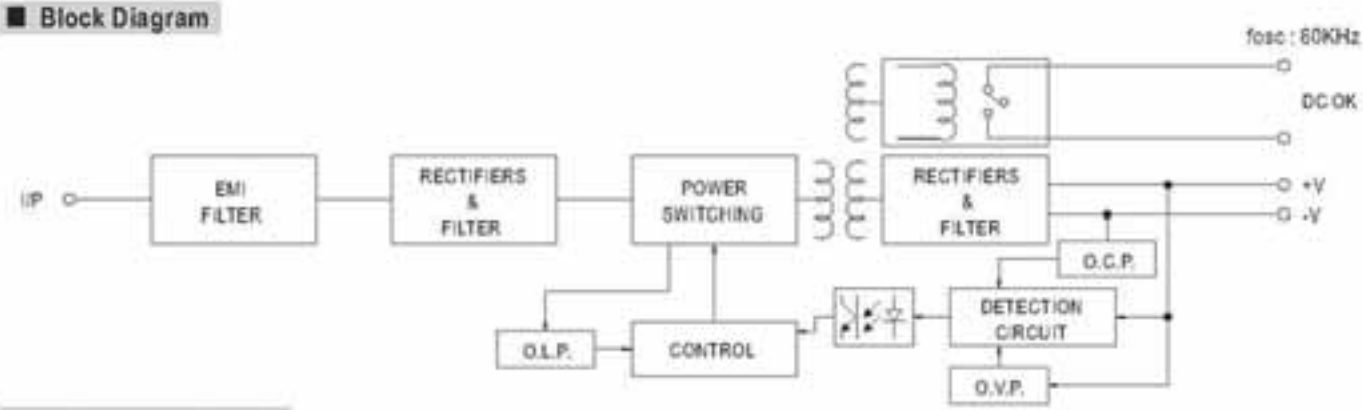

■ DC OK Relay Contact

Contact Close	When the output voltage reaches the adjusted output voltage.
Contact Open	When the output voltage drop below 90% output voltage.
Contact Ratings (max.)	30V/1A resistive load

■ Derating Curve

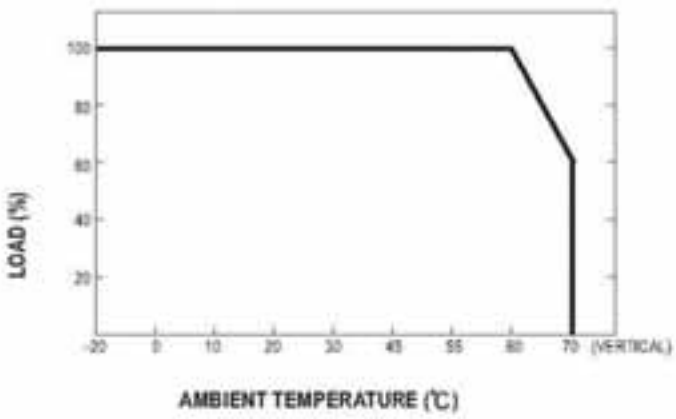

■ Output Derating VS Input Voltage

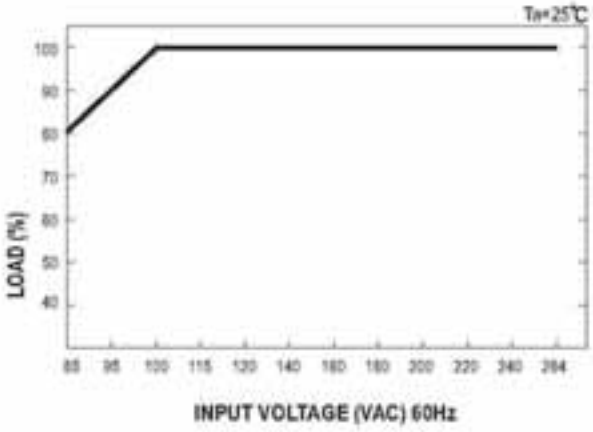

60W Single Output Industrial DIN RAIL Power Supply MDR-60 series

■ Features :

- Universal AC input/Full range
- Protections: Short circuit / Overload / Over voltage
- Cooling by free air convection
- Can be installed on DIN rail TS-35/7.5 or 15
- NEC class 2 / LPS compliant (24V,48V only)
- LED indicator for power on
- DC OK relay contact
- No load power consumption<0.75W
- 100% full load burn-in test
- 3 years warranty

SPECIFICATION

MODEL		MDR-60-5	MDR-60-12	MDR-60-24	MDR-60-48
OUTPUT	DC VOLTAGE	5V	12V	24V	48V
	RATED CURRENT	10A	5A	2.5A	1.25A
	CURRENT RANGE	0 ~ 10A	0 ~ 5A	0 ~ 2.5A	0 ~ 1.25A
	RATED POWER	50W	60W	60W	60W
	RIPPLE & NOISE (max.) Note.2	50mVp-p	120mVp-p	150mVp-p	200mVp-p
	VOLTAGE ADJ. RANGE	5 ~ 6V	12 ~ 15V	24 ~ 30V	48 ~ 56V
	VOLTAGE TOLERANCE Note.3	±2.0%	±1.0%	±1.0%	±1.0%
	LINE REGULATION	±1.0%	±1.0%	±1.0%	±1.0%
	LOAD REGULATION	±1.5%	±1.0%	±1.0%	±1.0%
	SETUP, RISE TIME Note.5	500ms, 30ms/230VAC 500ms, 30ms/115VAC at full load			
	HOLD UP TIME (Typ.)	50ms/230VAC 20ms/115VAC at full load			
INPUT	VOLTAGE RANGE	85 ~ 264VAC 120 ~ 370VDC			
	FREQUENCY RANGE	47 ~ 63Hz			
	EFFICIENCY (Typ.)	75%	80%	88%	87%
	AC CURRENT (Typ.)	1.5A/115VAC 1A/230VAC			
	INRUSH CURRENT (Typ.)	COLD START 30A/115VAC 60A/230VAC			
	LEAKAGE CURRENT	<1mA / 240VAC			
PROTECTION	OVERLOAD	105 ~ 150% rated output power			
		Protection type : Constant current limiting, recovers automatically after fault condition is removed			
	OVER VOLTAGE	5.75 ~ 7.25V	15.6 ~ 18V	31.2 ~ 36V	57.6 ~ 64.8V
		Protection type : Shut down o/p voltage, re-power on to recover			
FUNCTION	DC OK SIGNAL	Relay contact rating(max.): 30V/1A resistive			
ENVIRONMENT	WORKING TEMP.	-20 ~ +70℃ (Refer to output load derating curve)			
	WORKING HUMIDITY	20 ~ 90% RH non-condensing			
	STORAGE TEMP., HUMIDITY	-40 ~ +85℃, 10 ~ 95% RH			
	TEMP. COEFFICIENT	±0.03%/℃ (0 ~ 50℃)			
	VIBRATION	Component : 10 ~ 500Hz, 2G 10min./1cycle, period for 60min. each along X, Y, Z axes ; Mounting : Compliance to IEC60068-2-6			
SAFETY & EMC (Note 4)	SAFETY STANDARDS	UL508, UL60950-1, TUV EN60950-1 approved, NEC class 2 / LPS compliant (24V,48V only)			
	WITHSTAND VOLTAGE	I/P-O/P:3KVAC I/P-FG:1.5KVAC O/P-FG:0.5KVAC			
	ISOLATION RESISTANCE	I/P-O/P, I/P-FG, O/P-FG >100M Ohms/500VDC 25℃ 70%RH			
	EMI CONDUCTION & RADIATION	Compliance to EN55011, EN55022 (CISPR22), EN61204-3 Class B			
	HARMONIC CURRENT	Compliance to EN61000-3-2,-3			
	EMS IMMUNITY	Compliance to EN61000-4-2, 3, 4, 5, 6, 8, 11, ENV50204, EN55024, EN61000-6-2, EN61204-3, heavy industry level, criteria A			
OTHERS	MTBF	299.2K hrs min. MIL-HDBK-217F (25℃)			
	DIMENSION	40*90*100mm (W*H*D)			
	PACKING	0.33Kg; 42pcs/14.8Kg/0.82CUFT			
NOTE	1. All parameters NOT specially mentioned are measured at 230VAC input, rated load and 25℃ of ambient temperature. 2. Ripple & noise are measured at 20MHz of bandwidth by using a 12" twisted pair-wire terminated with a 0.1uf & 47uf parallel capacitor. 3. Tolerance : includes set up tolerance, line regulation and load regulation. 4. The power supply is considered a component which will be installed into a final equipment. The final equipment must be re-confirmed that it still meets EMC directives. 5. Length of set up time is measured at first cold start. Turning ON/OFF the power supply may lead to increase of the set up time.				

■ Mechanical Specification

Case No.962A Unit:mm

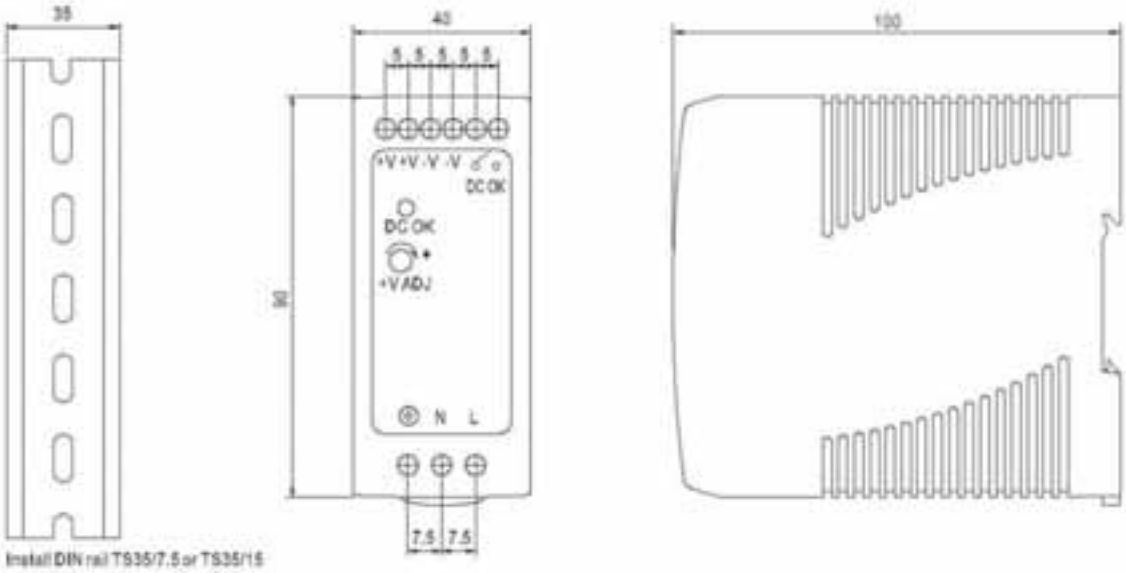

■ Block Diagram

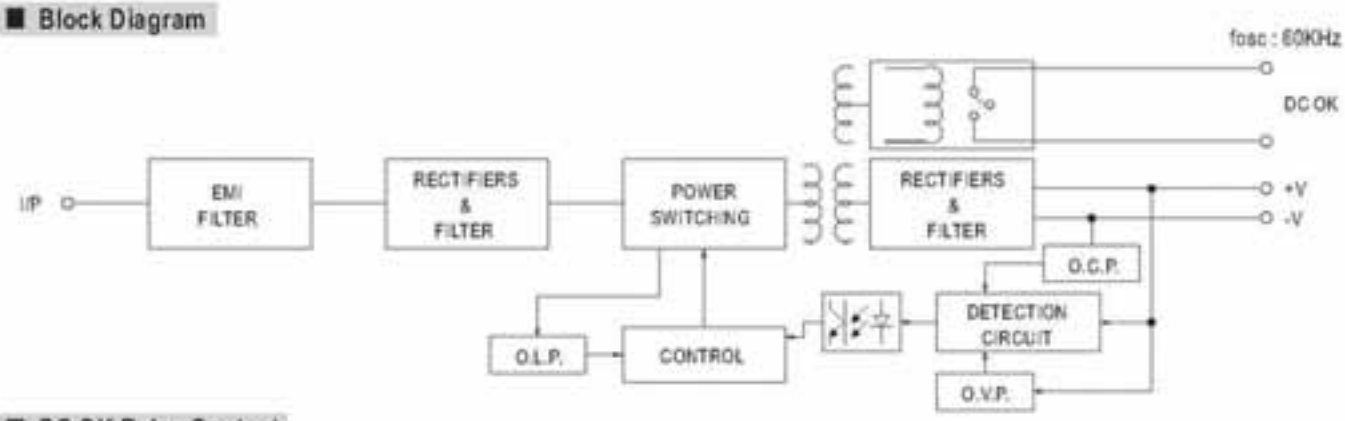

■ DC OK Relay Contact

Contact Close	When the output voltage reaches the adjusted output voltage.
Contact Open	When the output voltage drop below 90% output voltage.
Contact Ratings (max.)	30V/1A resistive load

■ Derating Curve

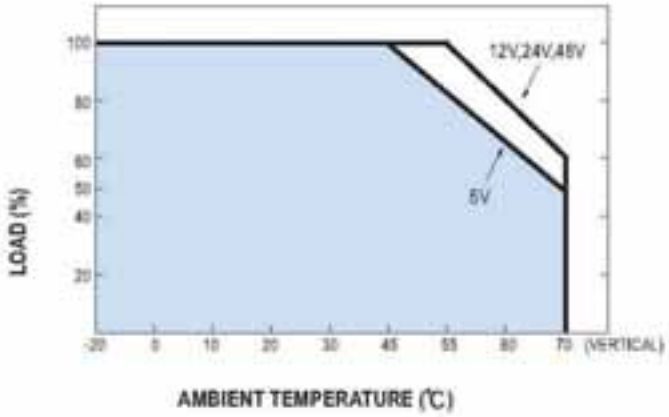

■ Output Derating VS Input Voltage

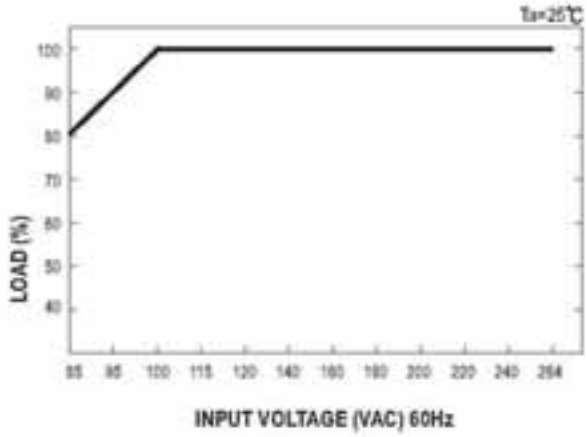

75W Single Output Industrial DIN RAIL Power Supply DR-75 series

■ Features :

- Universal AC input / Full range
- Protections:Short circuit / Overload / Over voltage / Over temperature
- Cooling by free air convection
- Can be installed on DIN rail TS-35/7.5 or 15
- UL 508(industrial control equipment)approved
- LED indicator for power on
- 100% full load burn-in test
- Fix switching frequency at 50KHz
- 3 years warranty

SPECIFICATION

MODEL		DR-75-12	DR-75-24	DR-75-48
OUTPUT	DC VOLTAGE	12V	24V	48V
	RATED CURRENT	6.3A	3.2A	1.6A
	CURRENT RANGE	0 ~ 6.3A	0 ~ 3.2A	0 ~ 1.6A
	RATED POWER	76W	76.8W	76.8W
	RIPPLE & NOISE (max.) Note.2	100mVp-p	150mVp-p	240mVp-p
	VOLTAGE ADJ. RANGE	12 ~ 14V	24 ~ 28V	48 ~ 53V
	VOLTAGE TOLERANCE Note.3	±2.0%	±1.0%	±1.0%
	LINE REGULATION	±0.5%	±0.5%	±0.5%
	LOAD REGULATION	±1.0%	±1.0%	±1.0%
	SETUP, RISE TIME	1000ms, 60ms/230VAC 1800ms, 60ms/115VAC at full load		
	HOLD UP TIME (Typ.)	60ms/230VAC 12ms/115VAC at full load		
INPUT	VOLTAGE RANGE	85 ~ 264VAC 120 ~ 370VDC		
	FREQUENCY RANGE	47 ~ 63Hz		
	EFFICIENCY (Typ.)	76%	80%	81%
	AC CURRENT (Typ.)	1.6A/115V 0.96A/230V		
	INRUSH CURRENT (Typ.)	COLD START 20A/115VAC 40A/230VAC		
	LEAKAGE CURRENT	<1mA / 240VAC		
PROTECTION	OVERLOAD	105 ~ 150% rated output power		
		Protection type : Constant current limiting, recovers automatically after fault condition is removed		
	OVER VOLTAGE	15 ~ 18.5V	29 ~ 34V	58 ~ 65V
		Protection type : Shut down o/p voltage, re-power on to recover		
	OVER TEMPERATURE	85℃ ±5℃ (TSW1) detect on heat sink of power transistor		
		Protection type : Shut down o/p voltage, recovers automatically after temperature goes down		
ENVIRONMENT	WORKING TEMP.	-10 ~ +60℃ (Refer to output load derating curve)		
	WORKING HUMIDITY	20 ~ 90% RH non-condensing		
	STORAGE TEMP., HUMIDITY	-20 ~ +85℃, 10 ~ 95% RH		
	TEMP. COEFFICIENT	±0.03%/℃ (0 ~ 50℃)		
	VIBRATION	10 ~ 500Hz, 2G 10min./1cycle, period for 60min. each along X, Y, Z axes; Mounting: Compliance to IEC60068-2-6		
SAFETY & EMC (Note 4)	SAFETY STANDARDS	UL508, TUV EN60950-1 approved		
	WITHSTAND VOLTAGE	I/P-O/P:3KVAC I/P-FG:1.5KVAC O/P-FG:0.5KVAC		
	ISOLATION RESISTANCE	I/P-O/P, I/P-FG, O/P-FG:100M Ohms/500VDC		
	EMI CONDUCTION & RADIATION	Compliance to EN55011,EN55022 (CISPR22) Class B		
	HARMONIC CURRENT	Compliance to EN61000-3-2,-3		
	EMS IMMUNITY	Compliance to EN61000-4-2,3,4,5,6,8,11, ENV50204, EN55024, EN61000-6-2 (EN50082-2), heavy industry level, criteria A		
OTHERS	MTBF	123.1K hrs min. MIL-HDBK-217F (25℃)		
	DIMENSION	55.5*125.2*100mm (W*H*D)		
	PACKING	0.6Kg; 20pcs/13Kg/1.29CUFT		
NOTE	1. All parameters NOT specially mentioned are measured at 230VAC input, rated load and 25℃ of ambient temperature. 2. Ripple & noise are measured at 20MHz of bandwidth by using a 12" twisted pair-wire terminated with a 0.1uf & 47uf parallel capacitor. 3. Tolerance : includes set up tolerance, line regulation and load regulation. 4. The power supply is considered a component which will be installed into a final equipment. The final equipment must be re-confirmed that it still meets EMC directives.			

File Name:DR-75-SPEC 2009-04-07

■ Mechanical Specification

Case No. 923 Unit:mm

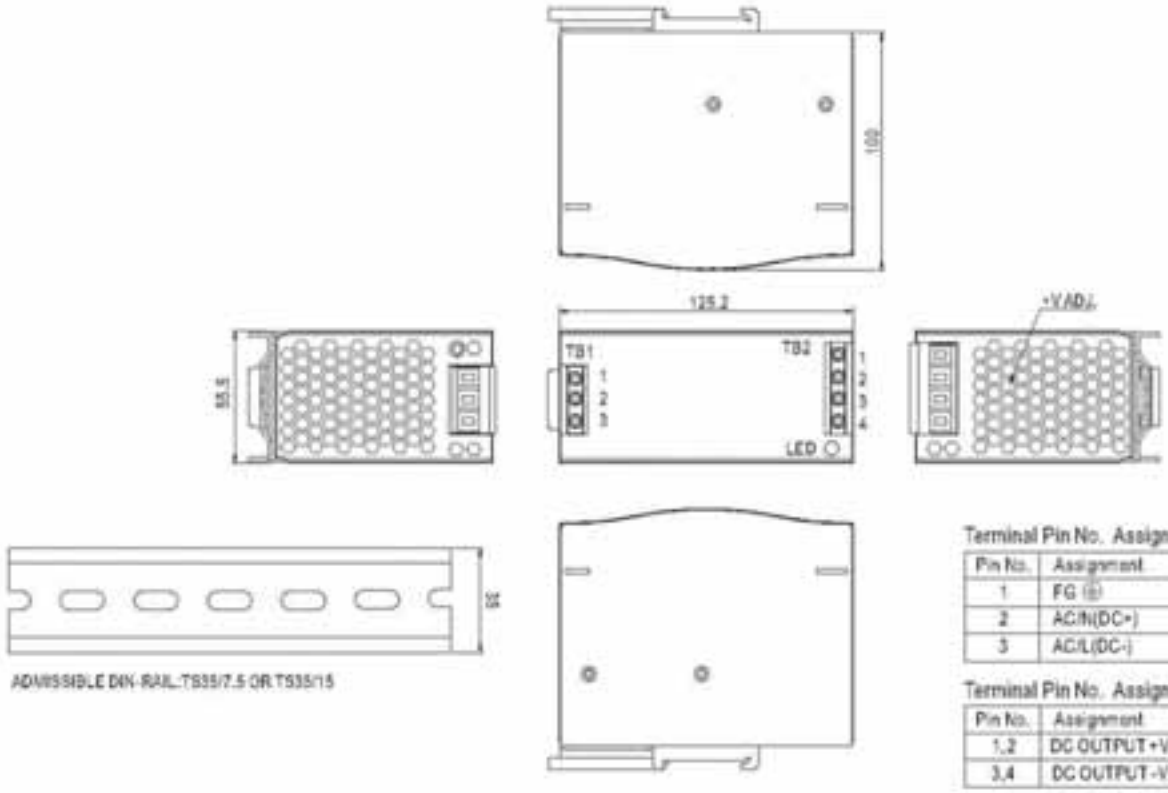

Terminal Pin No. Assignment (TB1)

Pin No.	Assignment
1	FG ⏚
2	AC/N(DC+)
3	AC/L(DC-)

Terminal Pin No. Assignment (TB2)

Pin No.	Assignment
1,2	DC OUTPUT +V
3,4	DC OUTPUT -V

■ Block Diagram

fosc : 50KHz

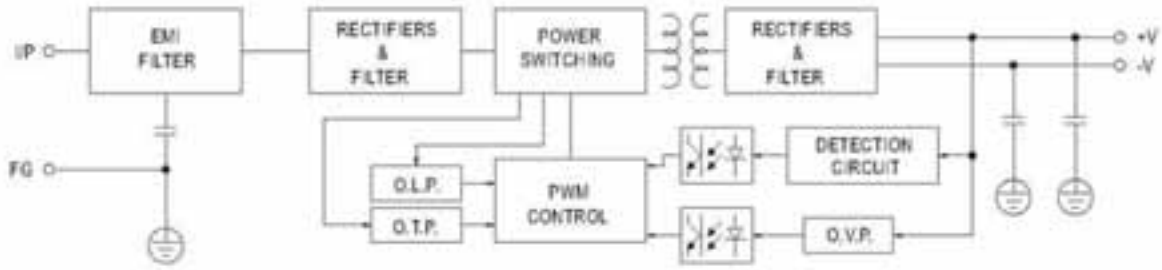

■ Output Derating

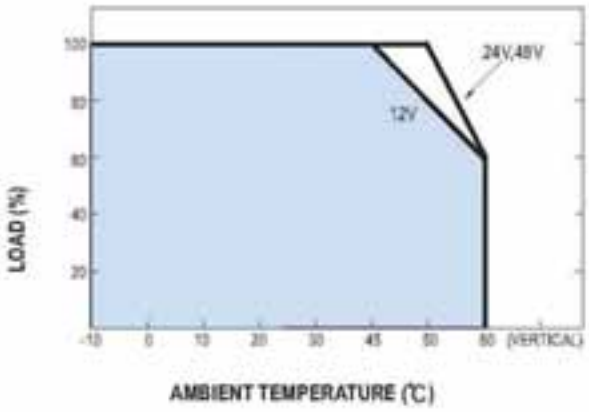

■ Output Derating Vs Input Voltage

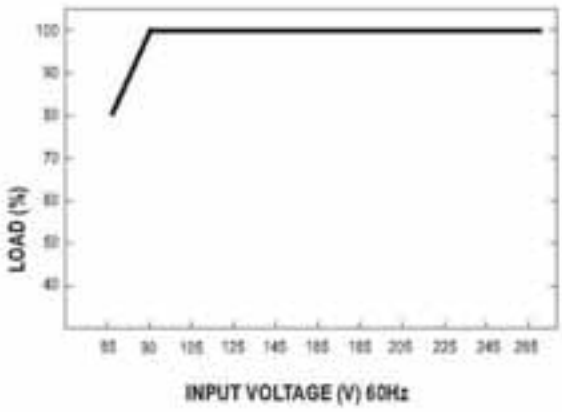

96W Single Output Industrial DIN RAIL Power Supply MDR-100 series

■ Features :

- Universal AC input / Full range
- Protections: Short circuit / Overload / Over voltage / Over temperature
- ZCS/ZVS technology to reduce power dissipation
- Cooling by free air convection
- Can be installed on DIN rail TS-35/7.5 or 15
- DC OK relay contact
- No load power consumption<1W
- NEC Class 2, limited power source (for 24V,48V only)
- LED indicator for power on
- 100% full load burn-in test
- 3 years warranty

SPECIFICATION

MODEL		MDR-100-12	MDR-100-24	MDR-100-48
OUTPUT	DC VOLTAGE	12V	24V	48V
	RATED CURRENT	7.5A	4A	2A
	CURRENT RANGE	0 ~ 7.5A	0 ~ 4A	0 ~ 2A
	RATED POWER	90W	96W	96W
	RIPPLE & NOISE (max.) Note.2	120mVp-p	150mVp-p	200mVp-p
	VOLTAGE ADJ. RANGE	12 ~ 15V	24 ~ 30V	48 ~ 56V
	VOLTAGE TOLERANCE Note.3	±1.0%	±1.0%	±1.0%
	LINE REGULATION	±1.0%	±1.0%	±1.0%
	LOAD REGULATION	±1.0%	±1.0%	±1.0%
	SETUP, RISE TIME Note.5	3000ms, 50ms/230VAC 3000ms, 50ms/115VAC at full load		
	HOLD UP TIME (Typ.)	50ms/230VAC 20ms/115VAC at full load		
INPUT	VOLTAGE RANGE Note.6	85 ~ 264VAC 120 ~ 370VDC		
	FREQUENCY RANGE	47 ~ 63Hz		
	POWER FACTOR (Typ.)	PF≥0.95/230VAC PF≥0.98/115VAC at full load		
	EFFICIENCY (Typ.)	85%	86%	88%
	AC CURRENT (Typ.)	1.3A/115VAC 0.8A/230VAC		
	INRUSH CURRENT (Typ.)	COLD START 30A/115VAC 60A/230VAC		
	LEAKAGE CURRENT	<1mA / 240VAC		
PROTECTION	OVERLOAD	105 ~ 150% rated output power		
		Protection type : Constant current limiting, recovers automatically after fault condition is removed		
	OVER VOLTAGE	15.6 ~ 18V	31.2 ~ 36V	57.6 ~ 64.8V
		Protection type : Shut down o/p voltage, re-power on to recover		
	OVER TEMPERATURE	90℃ ±10℃ (RTH2) detect on heatsink of power transistor		
		Protection type : Shut down o/p voltage, re-power on to recover		
FUNCTION	DC OK SIGNAL	Relay contact rating(max.): 30V/1A resistive		
ENVIRONMENT	WORKING TEMP.	-10 ~ +60℃ (Refer to output load derating curve)		
	WORKING HUMIDITY	20 ~ 90% RH non-condensing		
	STORAGE TEMP., HUMIDITY	-40 ~ +85℃, 10 ~ 95% RH		
	TEMP. COEFFICIENT	±0.03%/℃ (0 ~ 50℃)		
	VIBRATION	Component : 10 ~ 500Hz, 2G 10min./1cycle, period for 60min. each along X, Y, Z axes ; Mounting : Compliance to IEC60068-2-6		
SAFETY & EMC (Note 4)	SAFETY STANDARDS	UL508, TUV EN60950-1 approved, design refer to NEC CLASS 2 (for 24V,48V only)		
	WITHSTAND VOLTAGE	I/P-O/P:3KVAC I/P-FG:1.5KVAC O/P-FG:0.5KVAC		
	ISOLATION RESISTANCE	I/P-O/P, I/P-FG, O/P-FG:>100M Ohms/500VDC 25℃ 70%RH		
	EMI CONDUCTION & RADIATION	Compliance to EN55011, EN55022 (CISPR22), EN61204-3 Class B		
	HARMONIC CURRENT	Compliance to EN61000-3-2,-3		
	EMS IMMUNITY	Compliance to EN61000-4-2, 3, 4, 5, 6, 8, 11, ENV50204, EN55024, EN61000-6-2, EN61204-3, heavy industry level, criteria A		
OTHERS	MTBF	346K hrs min. MIL-HDBK-217F (25℃)		
	DIMENSION	55*90*100mm (W*H*D)		
	PACKING	0.42Kg; 30pcs/13.6Kg/0.82CUFT		

NOTE

1. All parameters NOT specially mentioned are measured at 230VAC input, rated load and 25℃ of ambient temperature.
2. Ripple & noise are measured at 20MHz of bandwidth by using a 12" twisted pair-wire terminated with a 0.1uf & 47uf parallel capacitor.
3. Tolerance : includes set up tolerance, line regulation and load regulation.
4. The power supply is considered a component which will be installed into a final equipment. The final equipment must be re-confirmed that it still meets EMC directives.
5. Length of set up time is measured at first cold start. Turning ON/OFF the power supply may lead to increase of the set up time.
6. Derating maybe needed under low input voltages, please check the derating curve for more detail.

File Name:MDR-100-SPEC 2009-02-04

■ Mechanical Specification

Case No.973A Unit:mm

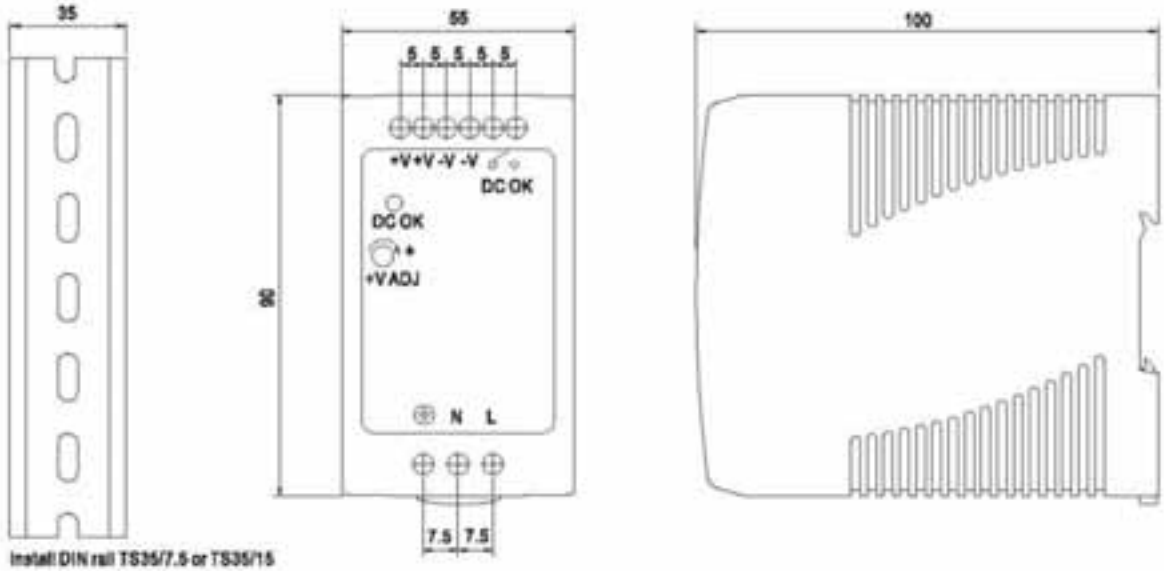

■ Block Diagram

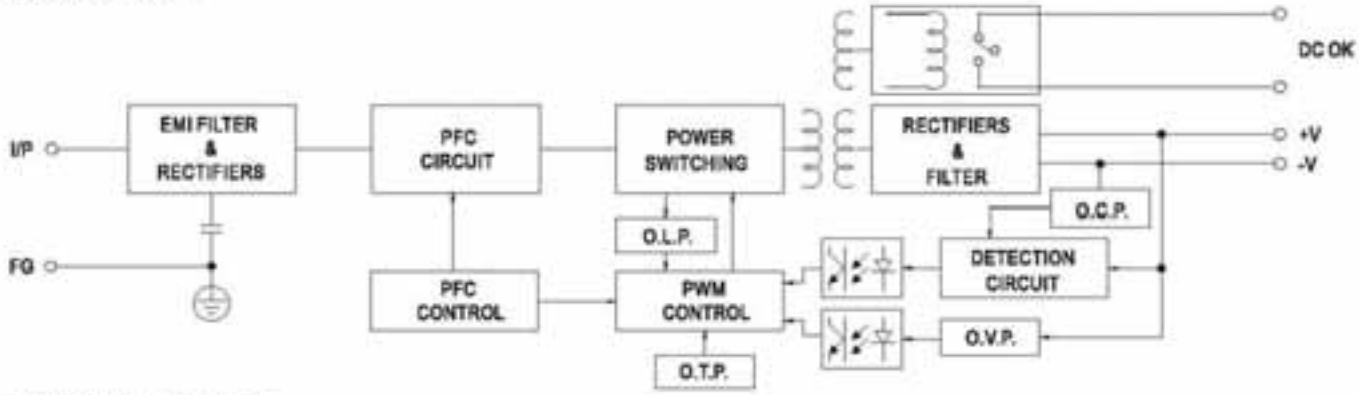

■ DC OK Relay Contact

Contact Close	When the output voltage reaches the adjusted output voltage.
Contact Open	When the output voltage drop below 90% output voltage.
Contact Ratings (max.)	30V/1A resistive load

■ Derating Curve

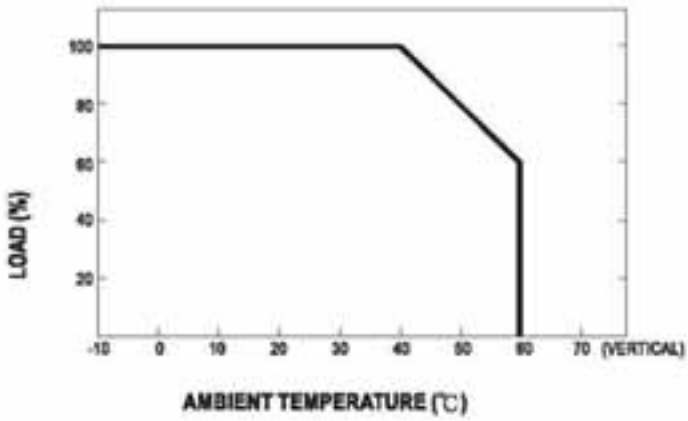

■ Output Derating VS Input Voltage

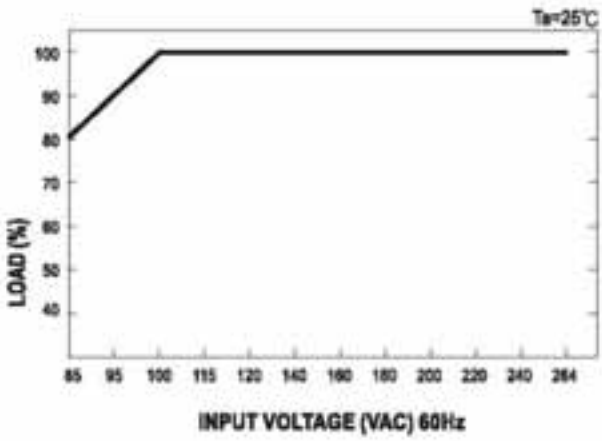

File Name:MDR-100-SPEC 2008-02-04

120W Single Output Industrial DIN RAIL Power Supply DR-120 series

■ Features :

- AC input range selectable by switch
- Protections: Short circuit / Overload / Over voltage / Over temperature
- Cooling by free air convection
- Can be installed on DIN rail TS-35/7.5 or 15
- UL 508(industrial control equipment)approved
- LED indicator for power on
- 100% full load burn-in test
- Fixed switching frequency at 55KHz
- 3 years warranty

SPECIFICATION

MODEL		DR-120-12	DR-120-24	DR-120-48
OUTPUT	DC VOLTAGE	12V	24V	48V
	RATED CURRENT	10A	5A	2.5A
	CURRENT RANGE	0 ~ 10A	0 ~ 5A	0 ~ 2.5A
	RATED POWER	120W	120W	120W
	RIPPLE & NOISE (max.) Note.2	80mVp-p	80mVp-p	100mVp-p
	VOLTAGE ADJ. RANGE	12 ~ 14V	24 ~ 28V	48 ~ 53V
	VOLTAGE TOLERANCE Note.3	±2.0%	±1.0%	±1.0%
	LINE REGULATION	±0.5%	±0.5%	±0.5%
	LOAD REGULATION	±1.0%	±1.0%	±1.0%
	SETUP, RISE TIME	500ms, 70ms/230VAC 500ms, 70ms/115VAC at full load		
	HOLD UP TIME (Typ.)	36ms/230VAC 32ms/115VAC at full load		
INPUT	VOLTAGE RANGE	88 ~ 132VAC/176 ~ 264VAC by switch 248 ~ 370VDC		
	FREQUENCY RANGE	47 ~ 63Hz		
	EFFICIENCY (Typ.)	80%	84%	85%
	AC CURRENT (Typ.)	2.6A/115VAC 1.6A/230VAC		
	INRUSH CURRENT (Typ.)	COLD START 20A/115VAC 40A/230VAC		
	LEAKAGE CURRENT	<3.5mA / 240VAC		
PROTECTION	OVERLOAD	105 ~ 150% rated output power		
		Protection type : Constant current limiting, recovers automatically after fault condition is removed		
	OVER VOLTAGE	15 ~ 16.5V	29 ~ 33V	58 ~ 65V
		Protection type : Shut down o/p voltage, re-power on to recover		
	OVER TEMPERATURE	85℃±5℃ (TSW1)	90℃±5℃(TSW1)	90℃±5℃(TSW1)
		Protection type : Shut down o/p voltage, recovers automatically after temperature goes down		
ENVIRONMENT	WORKING TEMP.	-10 ~ +60℃ (Refer to output load derating curve)		
	WORKING HUMIDITY	20 ~ 90% RH non-condensing		
	STORAGE TEMP., HUMIDITY	-20 ~ +85℃, 10 ~ 95% RH		
	TEMP. COEFFICIENT	±0.03%/℃ (0 ~ 50℃)		
	VIBRATION	10 ~ 500Hz, 2G 10min./1cycle, 60min. each along X, Y, Z axes; Mounting: Compliance to IEC60068-2-6		
SAFETY & EMC (Note 4)	SAFETY STANDARDS	UL508, UL60950-1, TUV EN60950-1 approved		
	WITHSTAND VOLTAGE	I/P-O/P:3KVAC I/P-FG:1.5KVAC O/P-FG:0.5KVAC		
	ISOLATION RESISTANCE	I/P-O/P, I/P-FG, O/P-FG:100M Ohms/500VDC		
	EMI CONDUCTION & RADIATION	Compliance to EN55011,EN55022 (CISPR22) Class B		
	HARMONIC CURRENT	Compliance to EN61000-3-2,-3		
	EMS IMMUNITY	Compliance to EN61000-4-2,3,4,5,6,8,11, ENV50204, EN55024, EN61000-6-2 (EN50082-2), heavy industry level, criteria A		
OTHERS	MTBF	136.8Khrs min. MIL-HDBK-217F (25℃)		
	DIMENSION	65.5*125.2*100mm (W*H*D)		
	PACKING	0.79Kg; 20pcs/16.5Kg/1.29CUFT		
NOTE	1. All parameters NOT specially mentioned are measured at 230VAC input, rated load and 25℃ of ambient temperature. 2. Ripple & noise are measured at 20MHz of bandwidth by using a 12" twisted pair-wire terminated with a 0.1uf & 47uf parallel capacitor. 3. Tolerance : includes set up tolerance, line regulation and load regulation. 4. The power supply is considered a component which will be installed into a final equipment. The final equipment must be re-confirmed that it still meets EMC directives.			

File Name:DR-120-SPEC 2008-04-07

■ Mechanical Specification

Case No. 921A Unit:mm

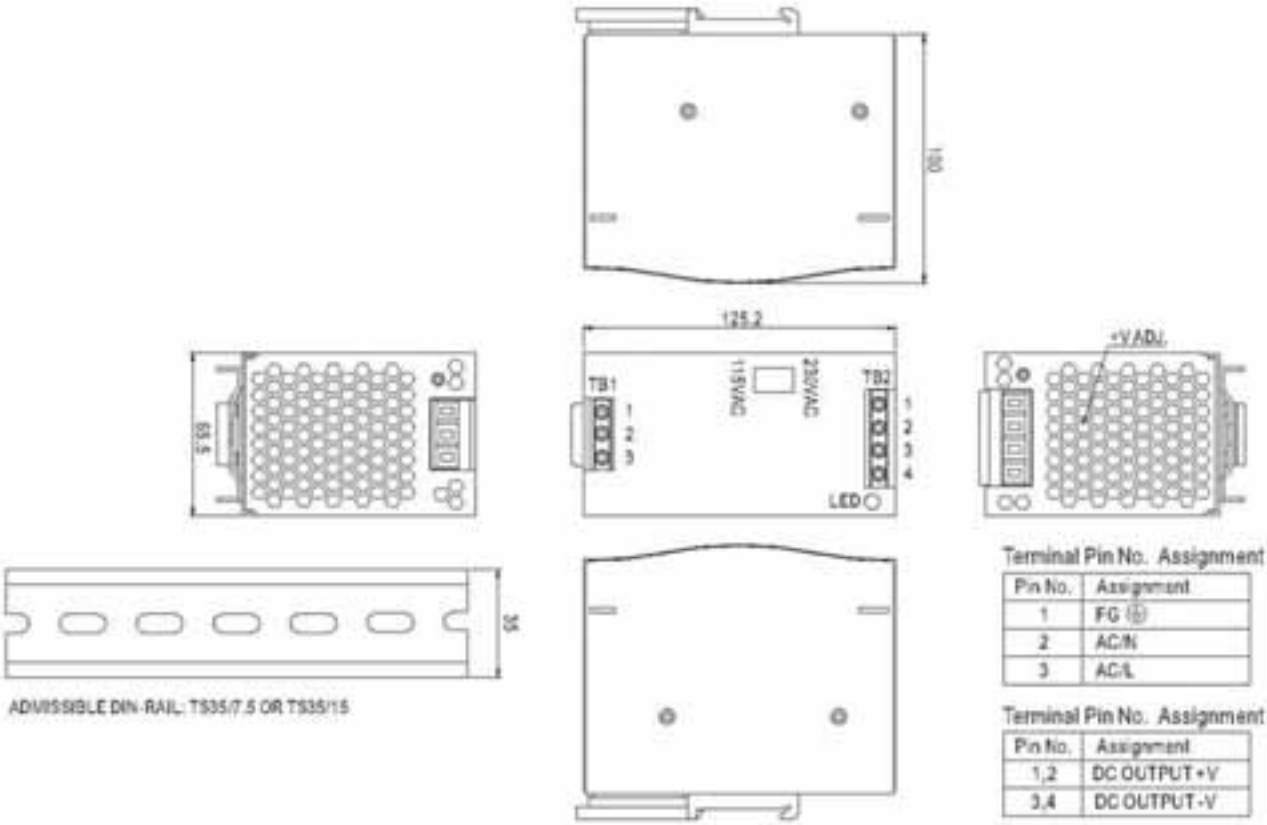

Terminal Pin No. Assignment (TB1)

Pin No.	Assignment
1	FG ⏚
2	AC/N
3	AC/L

Terminal Pin No. Assignment (TB2)

Pin No.	Assignment
1,2	DC OUTPUT +V
3,4	DC OUTPUT -V

■ Block Diagram

fosc : 55KHz

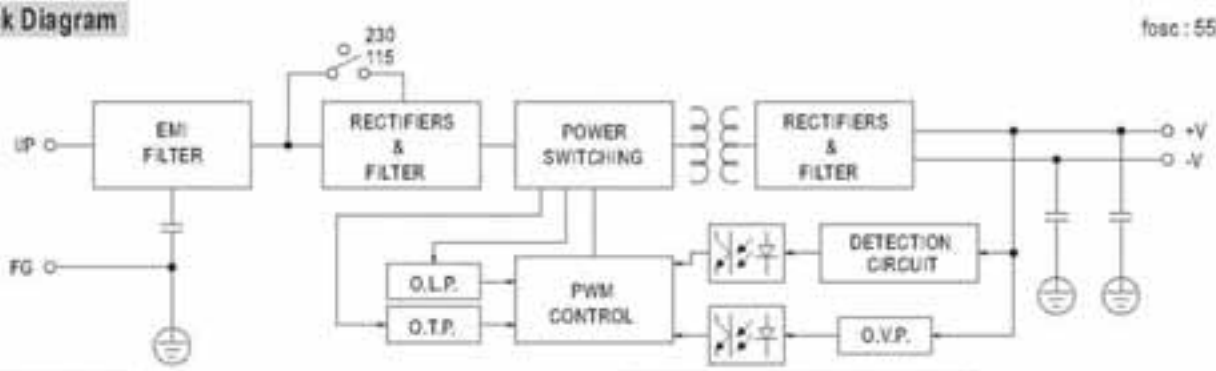

■ Derating Curve

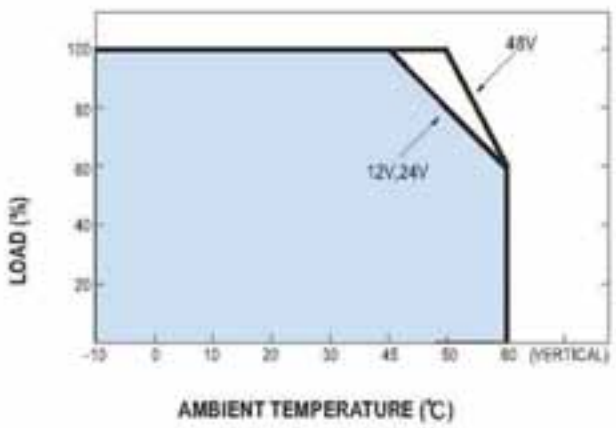

■ Static Characteristics (24V)

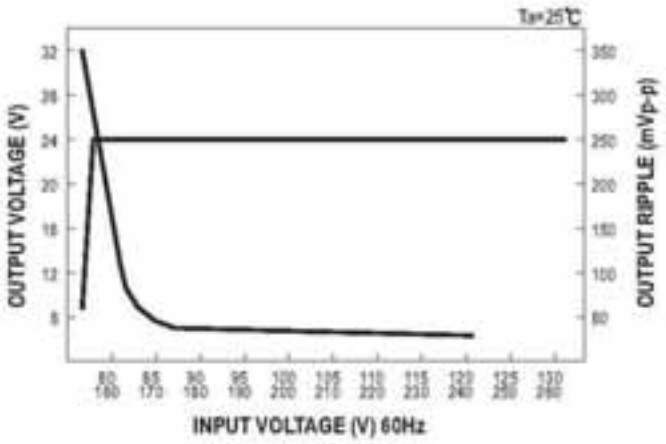

File Name:DR-120-SPEC 2008-04-07

240W Single Phase Industrial DIN RAIL Power Supply DRP-240 Series

■ Features :

- Universal AC input / Full range
- Built in active PFC function
- Protections: Short circuit / Overload / Over voltage / Over temperature
- Cooling by free air convection
- Can be installed on DIN rail TS-35/7.5 or 15
- UL 508(industrial control equipment)approved
- LED indicator for power on
- 100% full load burn-in test
- Fixed switching frequency at 100KHz
- 3 years warranty

SPECIFICATION

MODEL		DRP-240-24	DRP-240-48
OUTPUT	DC VOLTAGE	24V	48V
	RATED CURRENT	10A	5A
	CURRENT RANGE	0 ~ 10A	0 ~ 5A
	RATED POWER	240W	240W
	RIPPLE & NOISE (max.) Note.2	80mVp-p	150mVp-p
	VOLTAGE ADJ. RANGE	24 ~ 28V	48 ~ 53V
	VOLTAGE TOLERANCE Note.3	±1.0%	±1.0%
	LINE REGULATION	±0.5%	±0.5%
	LOAD REGULATION	±1.0%	±1.0%
	SETUP, RISE TIME	800ms, 40ms/230VAC 800ms, 40ms/115VAC at full load	
	HOLD UP TIME (Typ.)	24ms/230VAC 24ms/115VAC at full load	
INPUT	VOLTAGE RANGE Note.5	85 ~ 264VAC 120 ~ 370VDC	
	FREQUENCY RANGE	47 ~ 63Hz	
	POWER FACTOR (Typ.)	0.98/230VAC 0.99/115VAC at full load	
	EFFICIENCY (Typ.)	84%	85%
	AC CURRENT (Typ.)	2.8A/115VAC 1.4A/230VAC	
	INRUSH CURRENT (Typ.)	COLD START 27A/115VAC 45A/230VAC	
	LEAKAGE CURRENT	<3.5mA/ 240VAC	
PROTECTION	OVERLOAD	105 ~ 150% rated output power	
		Protection type : Constant current limiting, recovers automatically after fault condition is removed	
	OVER VOLTAGE	30 ~ 36V	54 ~ 60V
		Protection type : Shut down o/p voltage, re-power on to recover	
	OVER TEMPERATURE	100℃±5℃ (TSW1)detect on heat sink of power transistor	
		Protection type : Shut down o/p voltage, recovers automatically after temperature goes down	
ENVIRONMENT	WORKING TEMP.	-10 ~ +70℃ (Refer to output load derating curve)	
	WORKING HUMIDITY	20 ~ 90% RH non-condensing	
	STORAGE TEMP., HUMIDITY	-20 ~ +85℃, 10 ~ 95% RH	
	TEMP. COEFFICIENT	±0.03%/℃ (0 ~ 50℃)	
	VIBRATION	10 ~ 500Hz, 2G 10min./1cycle, 60min. each along X, Y, Z axes; Mounting: Compliance to IEC60068-2-6	
SAFETY & EMC (Note 4)	SAFETY STANDARDS	UL508, UL60950-1, TUV EN60950-1 approved	
	WITHSTAND VOLTAGE	I/P-O/P:3KVAC I/P-FG:1.5KVAC O/P-FG:0.5KVAC	
	ISOLATION RESISTANCE	I/P-O/P, I/P-FG, O/P-FG:100M Ohms/500VDC	
	EMI CONDUCTION & RADIATION	Compliance to EN55011,EN55022 (CISPR22) Class B	
	HARMONIC CURRENT	Compliance to EN61000-3-2,-3	
	EMS IMMUNITY	Compliance to EN61000-4-2,3,4,5,6,8,11, ENV50204, EN55024, EN61000-6-2 (EN50082-2), heavy industry level, criteria A	
OTHERS	MTBF	105.5Khrs min MIL-HDBK-217F (25℃)	
	DIMENSION	125.5*125.2*100mm (W*H*D)	
	PACKING	1.2Kg; 12pcs/15.5Kg/1.29CUFT	
NOTE	1. All parameters NOT specially mentioned are measured at 230VAC input, rated load and 25℃ of ambient temperature. 2. Ripple & noise are measured at 20MHz of bandwidth by using a 12" twisted pair-wire terminated with a 0.1uf & 47uf parallel capacitor. 3. Tolerance : includes set up tolerance, line regulation and load regulation. 4. The power supply is considered a component which will be installed into a final equipment. The final equipment must be re-confirmed that it still meets EMC directives. 5. Derating may be needed under low input voltages. Please check the derating curve for more details.		

File Name:DRP-240-SPEC 2003-04-07

■ Mechanical Specification

Case No. 922A Unit:mm

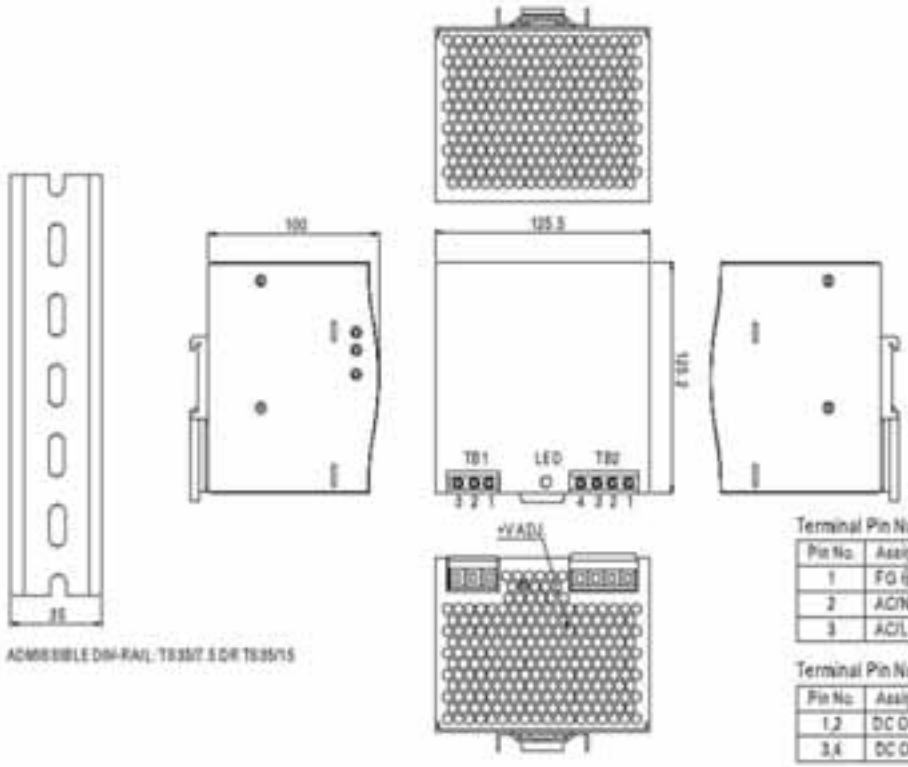

ADMISSIBLE DIN-RAIL: TS35/7.5 OR TS35/15

Terminal Pin Number Assignment (TB1)

Pin No.	Assignment
1	FG ⏚
2	AC/N
3	AC/L

Terminal Pin Number Assignment (TB2)

Pin No.	Assignment
1,2	DC OUTPUT +V
3,4	DC OUTPUT -V

■ Block Diagram

fosc : 100KHz

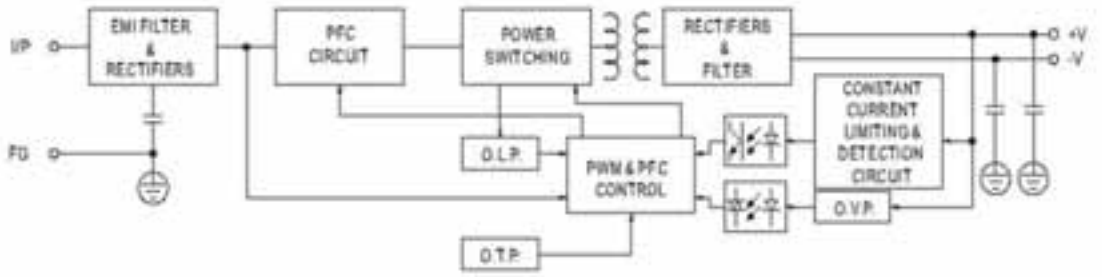

■ Derating Curve

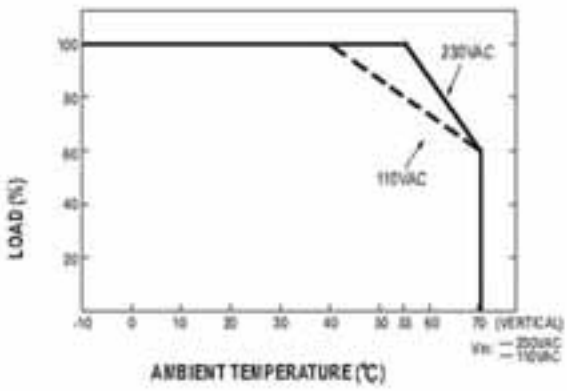

■ Output derating VS input voltage

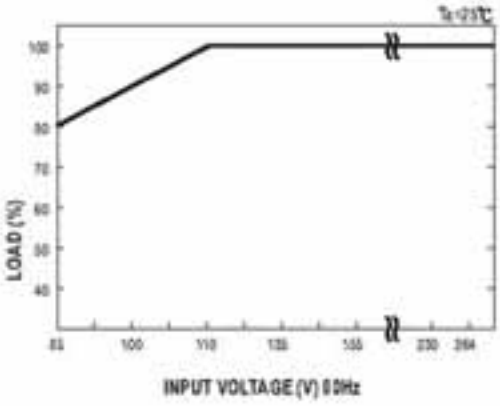

File Name:DRP-240-SPEC. 2005-04-07

240W Three Phase Industrial DIN RAIL Power Supply DRT-240 series

■ Features :

- Three-Phase AC 340 ~ 550V wide range input
- High efficiency 89% and low dissipation
- Protections: Short circuit / Overload / Over voltage / Over temperature
- Cooling by free air convection
- Built-in constant current limiting circuit
- Can be installed on DIN rail TS-35/7.5 or 15
- UL 508(industrial control equipment)approved
- EN61000-6-2(EN50082-2) industrial immunity level
- 100% full load burn-in test
- Fixed switching frequency at 70KHz
- 3 years warranty

SPECIFICATION

MODEL		DRT-240-24	DRT-240-48
OUTPUT	DC VOLTAGE	24V	48V
	RATED CURRENT	10A	5A
	CURRENT RANGE	0 ~ 10A	0 ~ 5A
	RATED POWER	240W	240W
	RIPPLE & NOISE (max.) Note.2	80mVp-p	80mVp-p
	VOLTAGE ADJ. RANGE	24 ~ 28V	48 ~ 55V
	VOLTAGE TOLERANCE Note.3	±1.0%	±1.0%
	LINE REGULATION	±0.5%	±0.5%
	LOAD REGULATION	±0.5%	±0.5%
	SETUP, RISE, HOLD UP TIME	1200ms, 40ms, 20ms/400VAC 800ms, 40ms, 40ms/500VAC at full load	
INPUT	VOLTAGE RANGE Note.5	Three-Phase 340 ~ 550VAC (Dual phase operation possible) 480 ~ 780VDC	
	FREQUENCY RANGE	47 ~ 63Hz	
	EFFICIENCY (Typ.)	89%	
	AC CURRENT	0.95A/400VAC 0.75A/500VAC	
	INRUSH CURRENT (max.)	COLD START 50A	
	LEAKAGE CURRENT	<3.5mA / 530VAC	
PROTECTION	OVERLOAD	105 ~ 150% rated output power	
		Protection type : Constant current limiting, recovers automatically after fault condition is removed	
	OVER VOLTAGE	30 ~ 36V	59 ~ 66V
		Protection type : Shut down o/p voltage, re-power on to recover	
	OVER TEMPERATURE	100℃±5℃ (TSW) detect on heatsink of power switch	
		Protection type : Shut down o/p voltage, recovers automatically after temperature goes down	
ENVIRONMENT	WORKING TEMP.	-20 ~ +70℃ (Refer to output load derating curve)	
	WORKING HUMIDITY	20 ~ 90% RH non-condensing	
	STORAGE TEMP., HUMIDITY	-40 ~ +85℃, 10 ~ 95% RH	
	TEMP. COEFFICIENT	±0.03%/℃ (0 ~ 50℃)	
	VIBRATION	10 ~ 500Hz, 2G 10min./1cycle, 60min. each along X, Y, Z axes; Mounting: Compliance to IEC60068-2-6	
SAFETY & EMC (Note.4)	SAFETY STANDARDS	UL508, UL60950-1, TUV EN60950-1 approved	
	WITHSTAND VOLTAGE	I/P-O/P:3KVAC I/P-FG:1.5KVAC O/P-FG:0.5KVAC	
	ISOLATION RESISTANCE	I/P-O/P, I/P-FG, O/P-FG:100M Ohms / 500VDC / 25℃/ 70% RH	
	EMI CONDUCTION & RADIATION	Compliance to EN55011 (CISPR11), EN55022 (CISPR22), EN61204-3 Class B	
	EMS IMMUNITY	Compliance to EN61000-4-2,3,4,5,6,8,11, ENV50204, EN61204-3, EN61000-6-2 (EN50082-2), heavy industry level, criteria A	
OTHERS	MTBF	114.6Khrs min. MIL-HDBK-217F (25℃)	
	DIMENSION	125.5*125.2*100mm (W*H*D)	
	PACKING	1.3Kg; 12pcs/16.6Kg/1.29CUFT	

NOTE

1. All parameters NOT specially mentioned are measured at 400VAC input, rated load and 25℃ of ambient temperature.
2. Ripple & noise are measured at 20MHz of bandwidth by using a 12" twisted pair wire terminated with a 0.1uf & 47uf parallel capacitor.
3. Tolerance : includes set up tolerance, line regulation and load regulation.
4. The power supply is considered a component which will be installed into a final equipment. The final equipment must be re-confirmed that it still meets EMC directives.
5. Dual phase operation: derating of 20% is required.

■ Mechanical Specification

Case No. 922A Unit:mm

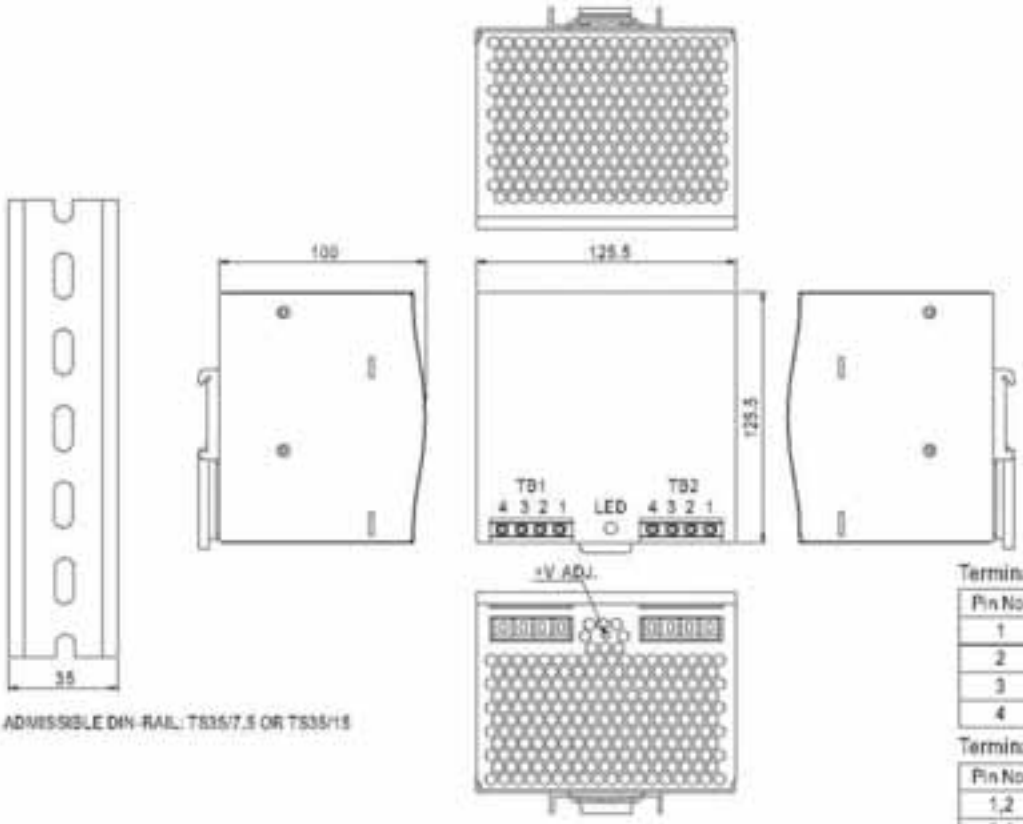

Terminal Pin No. Assignment (TB1)

Pin No.	Assignment
1	FG ⏚
2	AC/L3
3	AC/L2
4	AC/L1

Terminal Pin No. Assignment (TB2)

Pin No.	Assignment
1,2	DC OUTPUT +V
3,4	DC OUTPUT -V

■ Block Diagram

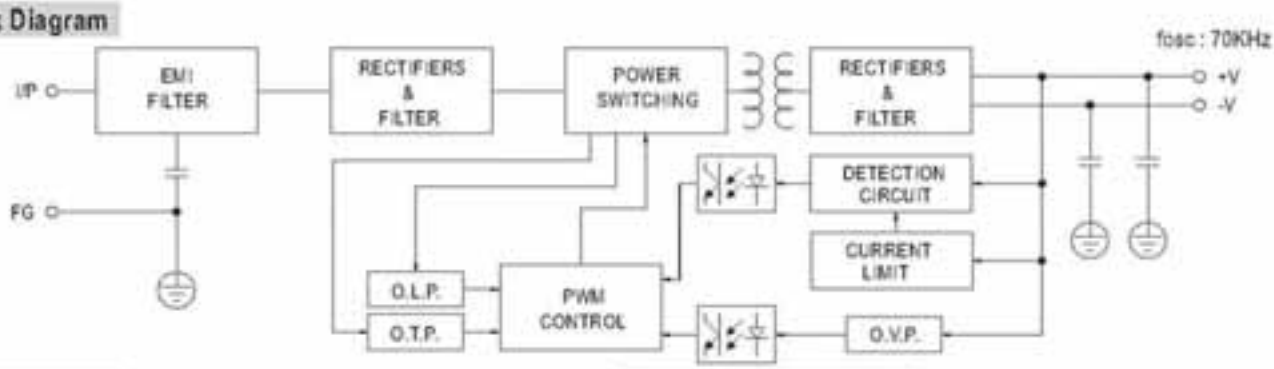

■ Derating Curve

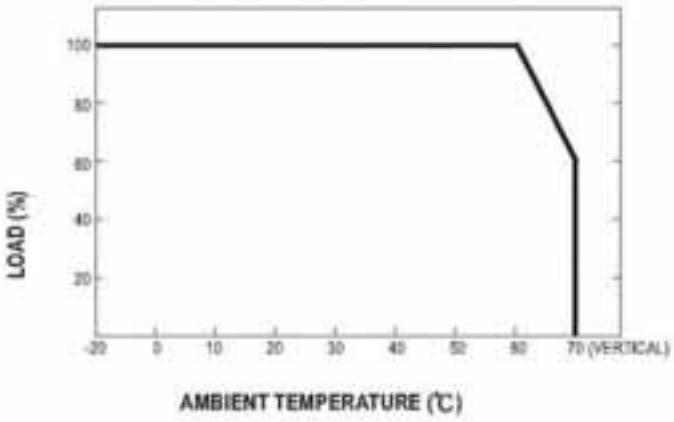

■ Static Characteristics

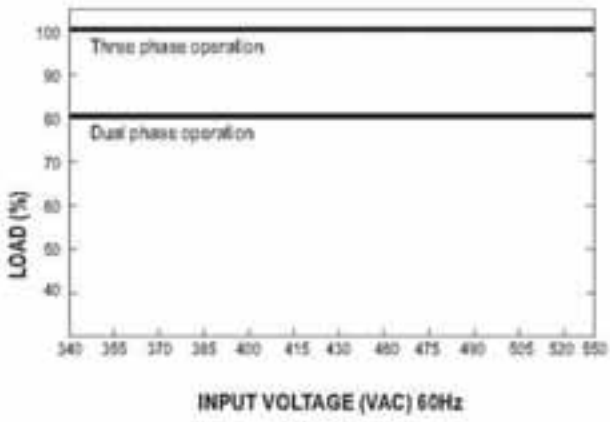

480W Three Phase Industrial DIN RAIL Power Supply DRT-480 series

■ Features :

- Three-Phase AC 340 ~ 550V wide range input
- High efficiency 89% and low dissipation
- Protections: Short circuit / Overload / Over voltage / Over temperature
- Cooling by free air convection
- Built-in constant current limiting circuit
- Can be installed on DIN rail TS-35/7.5 or 15
- UL 508(industrial control equipment)approved
- EN61000-6-2(EN50082-2) industrial immunity level
- 100% full load burn-in test
- 3 years warranty

SPECIFICATION

MODEL		DRT-480-24	DRT-480-48
OUTPUT	DC VOLTAGE	24V	48V
	RATED CURRENT	20A	10A
	CURRENT RANGE	0 ~ 20A	0 ~ 10A
	RATED POWER	480W	480W
	RIPPLE & NOISE (max.) Note.2	80mVp-p	80mVp-p
	VOLTAGE ADJ. RANGE	24 ~ 28V	48 ~ 55V
	VOLTAGE TOLERANCE Note.3	±1.0%	±1.0%
	LINE REGULATION	±0.5%	±0.5%
	LOAD REGULATION	±0.5%	±0.5%
	SETUP, RISE TIME	1200ms, 40ms/400VAC 800ms, 40ms/500VAC at full load	
	HOLD UP TIME (Typ.)	16ms/400VAC 35ms/500VAC at full load	
INPUT	VOLTAGE RANGE Note.5	Three-Phase 340 ~ 550VAC (Dual phase operation possible)	480 ~ 780VDC
	FREQUENCY RANGE	47 ~ 63Hz	
	EFFICIENCY (Typ.)	89%	90%
	AC CURRENT (Typ.)	1.7A/400VAC 1.3A/500VAC	
	INRUSH CURRENT (Typ.)	COLD START 50A	
	LEAKAGE CURRENT	<3.5mA / 530VAC	
PROTECTION	OVERLOAD	105 ~ 150% rated output power	
		Protection type : Constant current limiting, recovers automatically after fault condition is removed	
	OVER VOLTAGE	30 ~ 36V	59 ~ 68V
		Protection type : Shut down o/p voltage, re-power on to recover	
	OVER TEMPERATURE	110℃±5℃ (TSW) detect on heatsink of power switch	
		Protection type : Shut down o/p voltage, recovers automatically after temperature goes down	
ENVIRONMENT	WORKING TEMP.	-20 ~ +70℃ (Refer to output load derating curve)	
	WORKING HUMIDITY	20 ~ 90% RH non-condensing	
	STORAGE TEMP., HUMIDITY	-40 ~ +85℃, 10 ~ 95% RH	
	TEMP. COEFFICIENT	±0.03%/℃ (0 ~ 50℃)	
	VIBRATION	Component:10 ~ 500Hz, 2G 10min./1cycle, 60min. each along X, Y, Z axes; Mounting: Compliance to IEC60068-2-6	
SAFETY & EMC (Note.4)	SAFETY STANDARDS	UL508, UL60950-1, TUV EN60950-1 approved	
	WITHSTAND VOLTAGE	I/P-O/P:3KVAC I/P-FG:1.5KVAC O/P-FG:0.5KVAC	
	ISOLATION RESISTANCE	I/P-O/P, I/P-FG, O/P-FG:100M Ohms / 500VDC / 25℃/ 70% RH	
	EMI CONDUCTION & RADIATION	Compliance to EN55011 (CISPR11), EN55022 (CISPR22), EN61204-3 Class B	
	HARMONIC CURRENT	Compliance to EN61000-3-2,-3	
	EMS IMMUNITY	Compliance to EN61000-4-2,3,4,5,6,8,11, ENV50204, EN61204-3, EN61000-6-2 (EN50082-2), heavy industry level, criteria A	
OTHERS	MTBF	91.1Khrs min. MIL-HDBK-217F (25℃)	
	DIMENSION	227*125.2*100mm (W*H*D)	
	PACKING	2.5Kg; 6pcs/16Kg/1.75CUFT	
NOTE	1. All parameters NOT specially mentioned are measured at 400VAC input, rated load and 25℃ of ambient temperature. 2. Ripple & noise are measured at 20MHz of bandwidth by using a 12" twisted pair-wire terminated with a 0.1uf & 47uf parallel capacitor. 3. Tolerance : includes set up tolerance, line regulation and load regulation. 4. The power supply is considered a component which will be installed into a final equipment. The final equipment must be re-confirmed that it still meets EMC directives. 5. Dual phase operation: derating of 20% is required.		

File Name:DRT-480-SPEC 2009-11-25

■ Mechanical Specification

Case No.930A Unit:mm

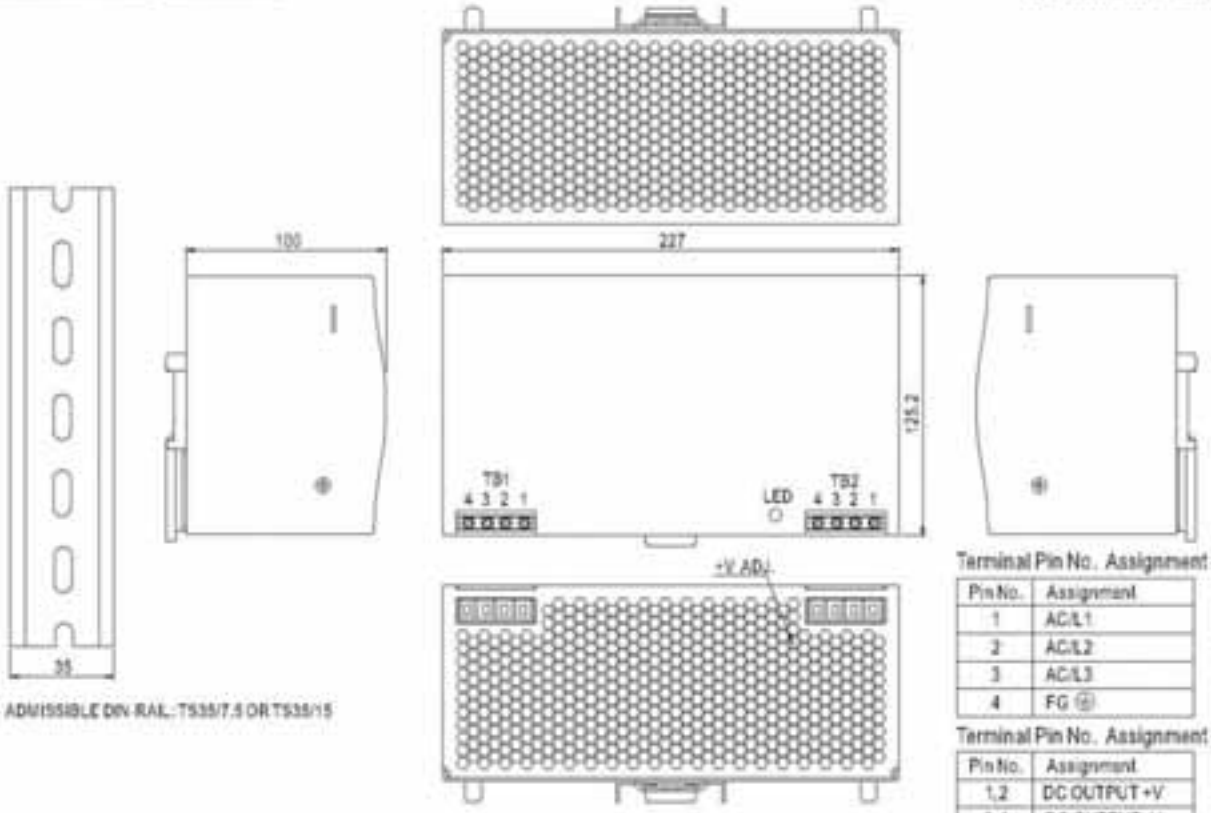

ADMISSIBLE DIN RAIL: TS35/7.5 OR TS35/15

Terminal Pin No. Assignment (TB1)

Pin No.	Assignment
1	AC/L1
2	AC/L2
3	AC/L3
4	FG ⏚

Terminal Pin No. Assignment (TB2)

Pin No.	Assignment
1,2	DC OUTPUT +V
3,4	DC OUTPUT -V

■ Block Diagram

fosc : 70KHz

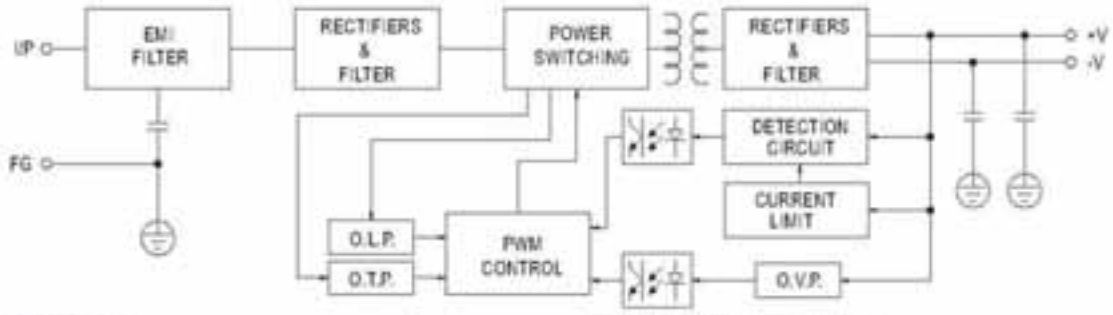

■ Derating Curve

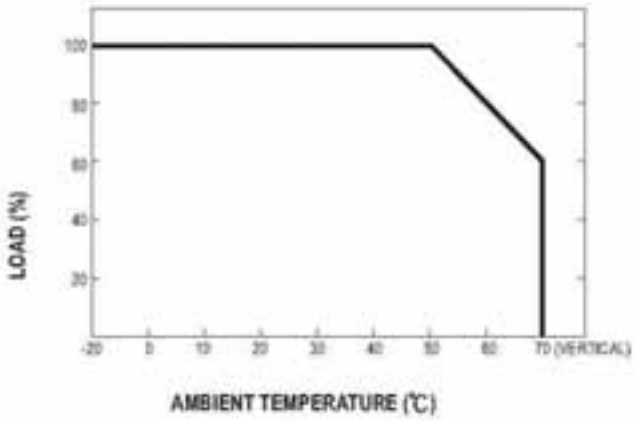

■ Static Characteristics

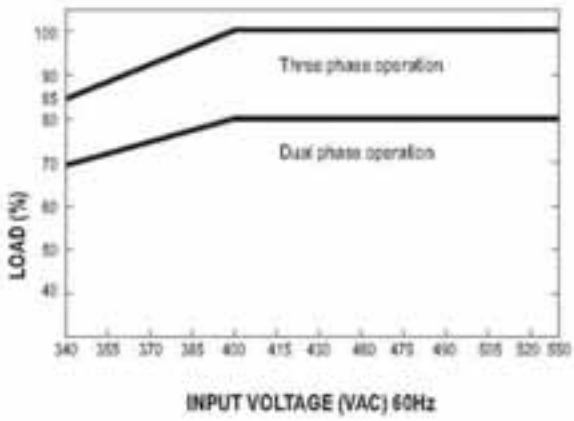

File Name DRT-480-SPEC 2009-11-25

960W Three Phase Industrial DIN RAIL Power Supply DRT-960 series

■ Features :

- Three-Phase AC 340 ~ 550V wide range input
- High efficiency 91% and low dissipation
- Protections: Short circuit / Overload / Over voltage / Over temperature
- Optional parallel function(1+1)
- Cooling by free air convection
- Can be installed on DIN rail TS-35/7.5 or 15
- UL 508(industrial control equipment)approved
- EN61000-6-2(EN50082-2) industrial immunity level
- 100% full load burn-in test
- 3 years warranty

SPECIFICATION

MODEL		DRT-960-24	DRT-960-48
OUTPUT	DC VOLTAGE	24V	48V
	RATED CURRENT	40A	20A
	CURRENT RANGE	0 ~ 40A	0 ~ 20A
	RATED POWER	960W	960W
	RIPPLE & NOISE (max.) Note.2	80mVp-p	80mVp-p
	VOLTAGE ADJ. RANGE	24 ~ 28V	48 ~ 55V
	VOLTAGE TOLERANCE Note.3	±1.0%	±1.0%
	LINE REGULATION	±0.5%	±0.5%
	LOAD REGULATION	±0.5%	±0.5%
	SETUP, RISE TIME	200ms, 60ms/400VAC 200ms, 60ms/500VAC at full load	
	HOLD UP TIME (Typ.)	14ms/400VAC 30ms/500VAC at full load	
INPUT	VOLTAGE RANGE	Three-Phase 340 ~ 550VAC (Dual phase operation possible in connecting L1,L3,FG Note.5)	
	FREQUENCY RANGE	47 ~ 63Hz	
	EFFICIENCY (Typ.)	91%	92%
	AC CURRENT (Typ.)	2A/400VAC 1.8A/500VAC	
	INRUSH CURRENT (max.)	COLD START 50A	
	LEAKAGE CURRENT	<3.5mA / 530VAC	
PROTECTION	OVERLOAD	105 ~ 125% rated output power	
		Protection type : Constant current limiting, unit will shut down o/p voltage after 3 sec. , re-power on to recover	
	OVER VOLTAGE	30 ~ 38V	59 ~ 68V
		Protection type : Shut down o/p voltage, re-power on to recover	
	OVER TEMPERATURE	110℃±5℃ (TSW1) Detect on heatsink of power transistor 85℃±5℃ (TSW2) Detect on heatsink of power diode	
		Protection type : Shut down o/p voltage, recovers automatically after temperature goes down	
ENVIRONMENT	WORKING TEMP.	-20 ~ +60℃ (Refer to output load derating curve)	
	WORKING HUMIDITY	20 ~ 90% RH non-condensing	
	STORAGE TEMP., HUMIDITY	-40 ~ +85℃, 10 ~ 95% RH	
	TEMP. COEFFICIENT	±0.03%/℃ (0 ~ 50℃)	
	VIBRATION	Component:10 ~ 500Hz, 2G 10min./1cycle, 60min. each along X, Y, Z axes; Mounting: Compliance to IEC60068-2-6	
SAFETY & EMC (Note 4)	SAFETY STANDARDS	UL508, UL60950-1, TUV EN60950-1 Approved	
	WITHSTAND VOLTAGE	I/P-O/P:3KVAC I/P-FG:1.5KVAC O/P-FG:0.5KVAC	
	ISOLATION RESISTANCE	I/P-O/P, I/P-FG, O/P-FG:100M Ohms/500VDC	
	EMI CONDUCTION & RADIATION	Compliance to EN55011 (CISPR11), EN55022 (CISPR22), EN61204-3 Class B	
	HARMONIC CURRENT	Compliance to EN61000-3-2,-3	
	EMS IMMUNITY	Compliance to EN61000-4-2,3,4,5,6,8,11, ENV50204, EN61204-3, EN61000-6-2 (EN50082-2) Heavy industry level, criteria A	
OTHERS	MTBF	122.5Khrs min. MIL-HDBK-217F (25℃)	
	DIMENSION	278*125.2*100mm (W*H*D)	
	PACKING	3.3Kg; 4pcs/14.2Kg/1.14CUFT	
NOTE	1. All parameters NOT specially mentioned are measured at 400VAC input, rated load and 25℃ of ambient temperature. 2. Ripple & noise are measured at 20MHz of bandwidth by using a 12" twisted pair-wire terminated with a 0.1uf & 47uf parallel capacitor. 3. Tolerance : includes set up tolerance, line regulation and load regulation. 4. The power supply is considered a component which will be installed into a final equipment. The final equipment must be re-confirmed that it still meets EMC directives. 5. Dual phase operation(connecting L1,L3,FG)is allowed under certain derating to output load. Please refer to the derating curves for details.		

File Name DRT-960-SPEC 2007-07-12

■ Mechanical Specification

Case No.934 Unit:mm

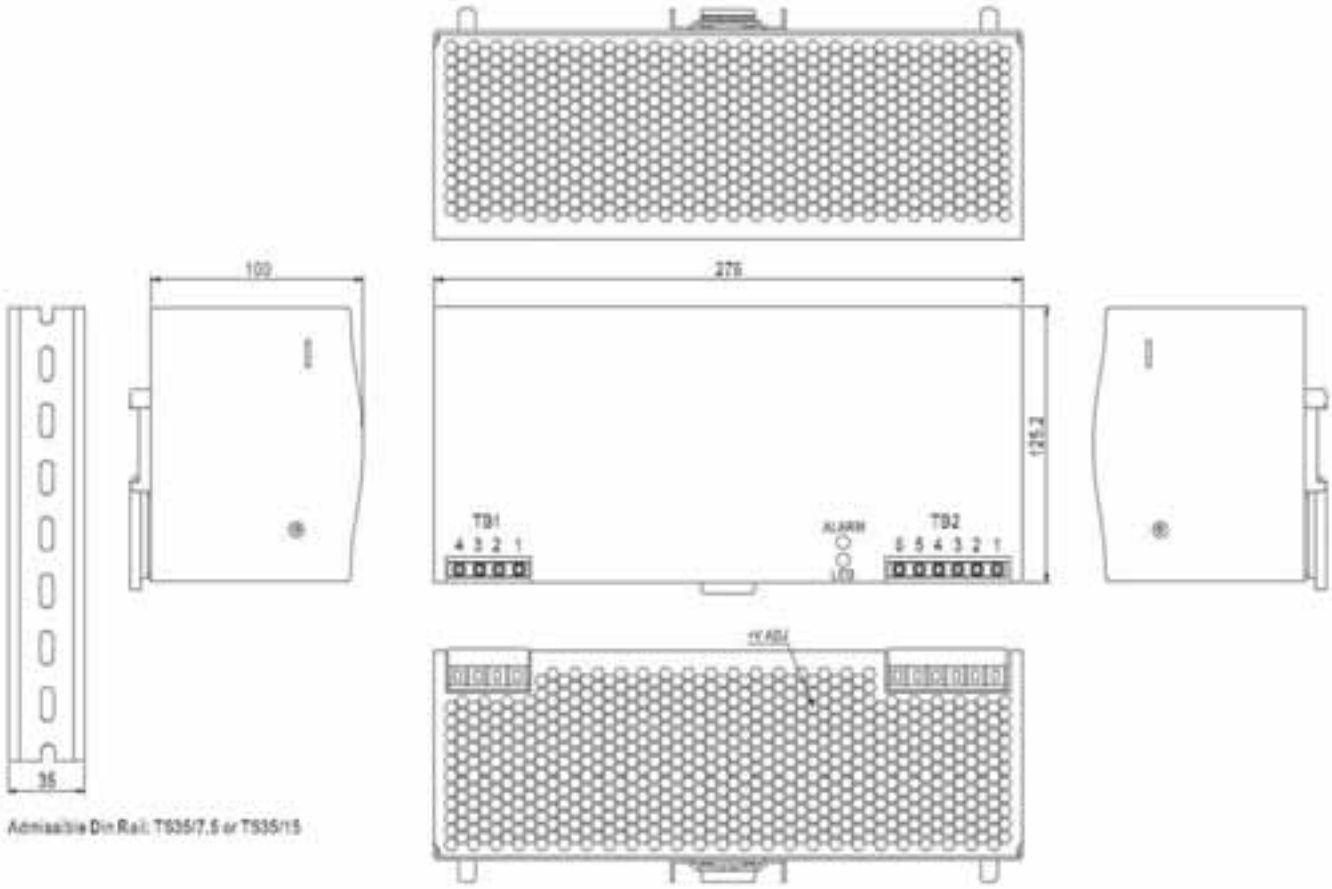

Terminal Pin No. Assignment (TB1)

Pin No.	Assignment
1	AC/L1
2	AC/L2
3	AC/L3
4	FG ⏚

Terminal Pin No. Assignment (TB2)

Pin No.	Assignment
1,2,3	DC OUTPUT +V
4,5,6	DC OUTPUT -V

■ Derating Curve

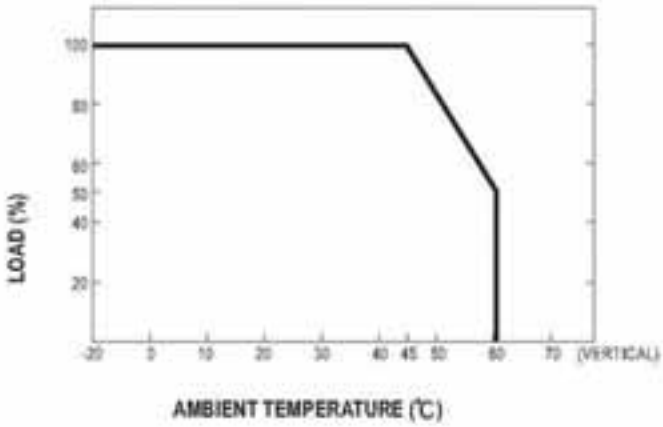

■ Static Characteristics

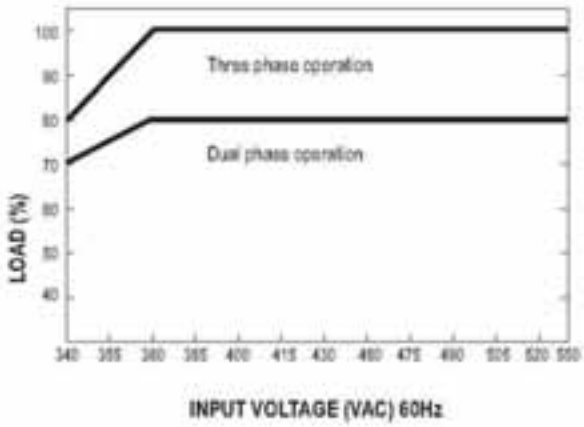

■ Parallel Function (1+1)-Optional (Special order required)

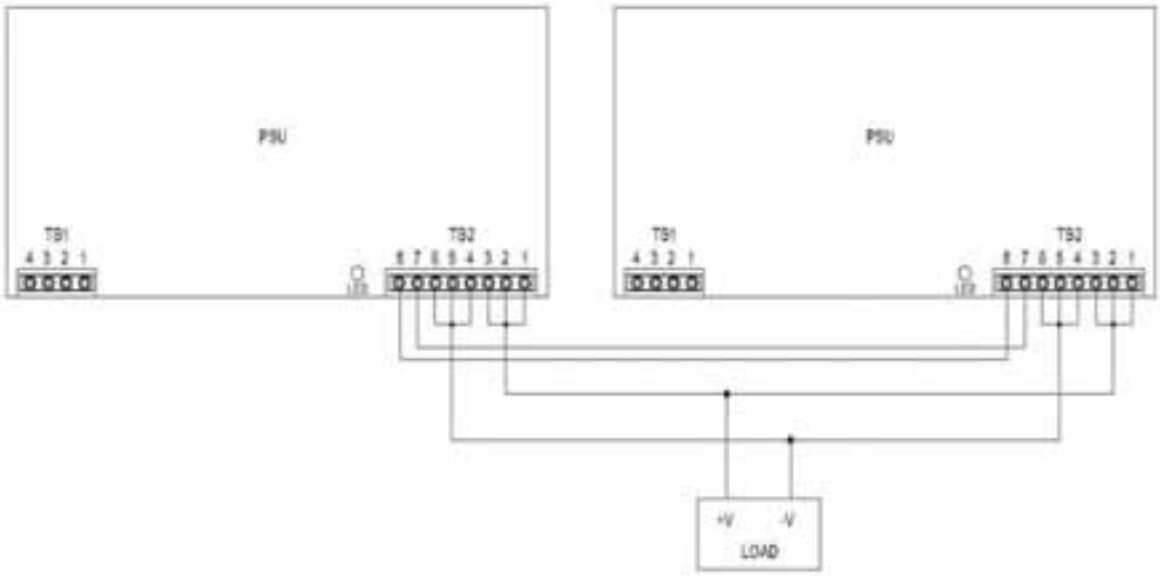

TB1 Terminal Pin. No Assignment

Pin No.	Assignment
1	AC/L1
2	AC/L2
3	AC/L3
4	FG ⏚

TB2 Terminal Pin. No Assignment

Pin No.	Assignment
1,2,3	DC OUTPUT +V
4,5,6	DC OUTPUT -V
7	GND
8	P(Current Share)

Note: Under parallel operation, if the load current is too small, only one PSU(master) would provide the power and hence the LED indicator of other PSUs may not light up.

Local Distributor

SHAMROCK CONTROLS

13735 Beta Road • Dallas, Texas • 75244
Ph: (972) 233-6712 • Fax: (972) 233-8039
www.shamrockcontrols.com